lipovica

technical catalog

w

lipovica

tradition for the future ...

Contents

Introduction

THE LI POVICA FACTORY WAS FOUNDED FAR BACK IN 1968. IN 1972, THE EKONOMIK RADIA TOR WAS FIRST DEVELOPED IN 1972 LEADING TO THE COMMENCEMENT OF SERIES PRODUCTION.

Lipovica has rapidly become the leading manufacturer of aluminium radiators in today's domestic market.

Towards the late 1980s, Lipovica experienced its greatest manufacturing expansion resulting in the production of 4,000,000 radiator members in 1987. This led to the company assuming second place in Europe based on the number of manufactured die-cast aluminium radiators. Besides manufacturing radiators, the company also manufactures pressure casts and gravity casts as requested by customers. Almost 60 years of existence and work has made the name Lipovica a synonym for quality, durability and reliability.

The proof of this is that exports cover 75% of total manufacturing capacity to countries such as Bosnia-Herzegovina, Serbia, Macedonia, the Czech Republic, Romania, Bulgaria, Portugal, Algeria, Palestina, Lebanon, Jordan, Ukraine, SAR, France, Canada and other countries.

STANDARDS

The standard at the Lipovica factory is to manufacture high-quality products. Business and manufacturing is undertaken in compliance to standards HRN EN 442 and the ISO 9001 and The ISO 9001:2008 certificates The ISO 14001:2004 certificates ISO 14001 standards. Lipovica radiators have been one of the first domestic industrial products to carry the CE designation. Due to their high quality, good mechanical properties, durability and exceptional resistance to corrosion, Lipovica radiators come with a 10-year guarantee. Lipovica radiators have been tested at the Faculty of Mechanical Engineering and Naval Architecture in Zagreb, the WSPlab in Stuttgart, the Engineering Test Institute in Brno, and other important institutions all of which have confirmed the high quality and high thermal efficiency of Lipovica radiators.

Thanks to an effective environmental management system and a closed-loop production system, whereby everything is directed towards the recycling of waste material and energy savings, we have

Orion solar PLANO ekonomik lipovica

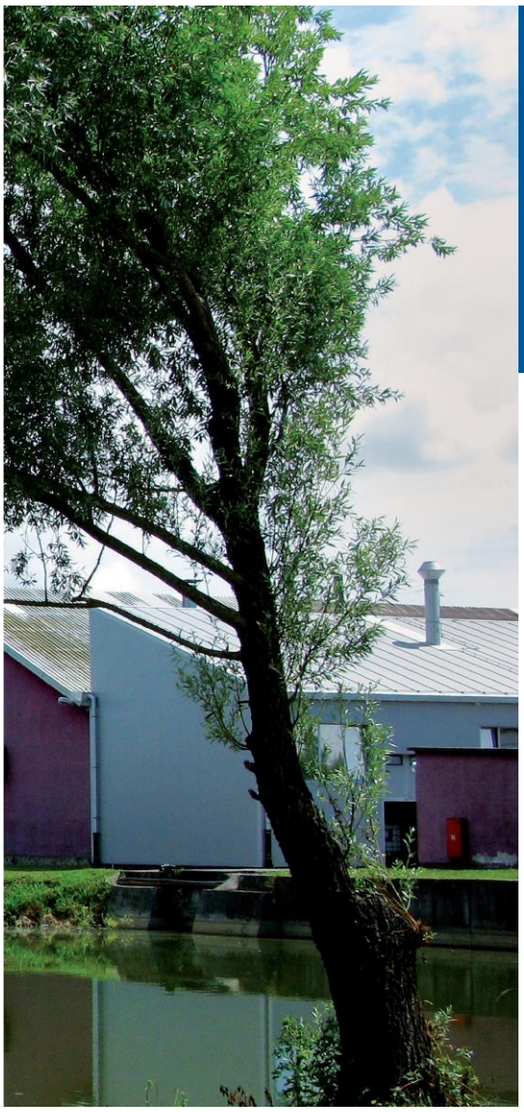

Lipovica radiators provide an abundance of warmth and its modern design will enrich any area. The high quality and durability of Lipovica radiators are features that reward any buyer who chooses Lipovica.


Certificate
of Registration
This is to certify that :
LIPOVICA d.o.o.
Lipovečka 22, Popovača, Croatia
Has been assessed by International Certification Registrar Ltd., in respect of their Quality Management Systems and found to comply with
ISO 9001:2008
Approval is hereby granted for registration providing the rules and conditions relating to certification are observed at all times.
Certification Scope :
Development and manufacture of aluminum radiators, press and cast moulds
Certificate Issue Date: 18th October 2013
Expiration Date: 17th October 2016
Certificate No.: Q353310
The Seal of ICR Limited was here to affixed in the presence of :
President
ICR ISO 9001 REGISTERED FIRM
IAF ANAB

Certifikat ISO 9001:2008


Certificate
of Registration
This is to certify that :
LIPOVICA d.o.o
Lipovečka 22, Popovača, Croatia
Has been assessed by International Certification Registrar Ltd., in respect of their Environmental Management Systems and found to comply with
ISO 14001:2004
Approval is hereby granted for registration providing the rules and conditions relating to certification are observed at all times.
Certification Scope :
Development and manufacture of aluminum radiators, press and cast moulds
Certificate Issue Date: 18th October 2013
Expiration Date: 17th October 2016
Certificate No.: E168610
The Seal of ICR Limited was here to affixed in the presence of :
President
ICR ISO 14001 REGISTERED FIRM
IAF ANAB

Certifikat ISO 14001:2004

succeeded in acquiring the ISO 14001 certificate. There is a rich ecosystem present in the proximate surroundings of our factory, whereas the tributary and lake, an integral part of the factory, provide a habitat for some very susceptible animal species: otters, beavers, wild ducks and herons. Lipovica radiators are products that comply to the HRN EN 442-2 standard, hold the ISO 9001 and ISO 14001 certificates, possess the Croatian quality and CE designation and provide buyers with a 20-year guarantee.

ICR INTERNATIONAL CERTIFICATION REGISTRAR ANAB ACCREDITED

Registered
ISO 9001:2008 / ISO 14001:2004

CE Croatian Quality

CHARACTERISTICS OF LIPOVICA RADIATORS

Lipovica radiators are made from an aluminium alloy which allows rapid transmission of heat, and due to its anti-corrosion stability, guarantees an almost unlimited lifetime.

Based on experimental testing and laboratory analysis carried out at the Faculty of Mechanical Engineering and Naval Architecture at the University of Zagreb, it was determined that the Lipovica radiators, made from EN46100 aluminium alloy, maintain during use a constant quality on the internal surface layer, with the corrosion rate found to be below the tolerance of 0.1 mm/year (VDI-2035). The determined rate of corrosion is less than 0.03mm/year. Besides tests carried out at the Faculty of Mechanical Engineering and Naval Architecture at the University of Zagreb, the WSPlab in Stuttgart, quality is monitored also during the manufacturing process. Quality control starts with a chemical analysis of the melt and finishes with the testing of impermeability of the individual columns and radiator sections. Radiators are tested in compliance to standard EN 442 in WSPlab in Stuttgart and the Faculty of Mechanical Engineering and Naval Architecture in Zagreb. Furthermore, the CE designation confirms that all the requirements of the European Union market are met.

A 1 0-year guarantee is provided for all Lipovica models of radiators under the condition that installation was carried out by an expert and the system is used in the correct manner.

Manufacturing radiators

The technological procedure for manufacturing radiators comprises the following phases: die casting, assembly and coating.

DIE CASTING RADIATORS

Radiators are die casted from an aluminium alloy possessing properties such as excellent thermal transmission, high resistance to corrosion and good mechanical characteristics.

The melting of the alloy is carried out in a gas fired aluminium furnace with a capacity of 10 t for melted alloys. The melt is processed and verified prior to casting radiators. Before pouring out the melt from the casting furnace, the chemical composition of the alloy is verified, and the metallographic structure is also analysed if required.

Casting radiators is carried out using high-pressure machines with a closing force of between 7,000 kN and 13,500 kN. The machines are quipped with electric resistance furnaces used for automatically maintaining the temperature of the melt. Each machine is equipped with automatic melt dosing, automatic lubrication of casting tools, a system for forced ventilation and filtering of particles and steam from the casting process, and automatic temperature control of the tool and hydraulic medium within the required limits. The radiator casting process is carried out by systematic control of casting parameters and subsequent quality control of the radiators themselves.

When designing casting plants or foundries, strict attention is given to environmental protection. All systems used in the casting plant are closed-systems, with the thermal waste from the casting process returned back into the casting plant. During the winter seasons, this technical process is used to heat the casting plant areas.

RADIATOR ASSEMBLY

Following the casting process, the radiator columns are finish treated, assembled into radiator sections and an initial permeability test is carried out. The permeability test is carried out on the complete product. On these processing lines, the technical parameters for operation are verified as well as the radiator columns and sections. Lines are equipped with closed systems for filtering particles from the radiator treatment process.

In the next phase, a visual inspection of the assembled radiator is carried out including additional verification relating to 100% impermeability of the radiator. This testing is carried out at an air pressure of 10 bars. When required by customers and for particular markets we conduct testing at pressures of up to 30 bars. The assembly (formation) of radiator sections sized as required by customers is carried out in the assembly stage. When completely finished, assembled in accordance with customer requirements and once designated, the radiator sections are directed to the next production phase – colouring or pigmenting.

CONNECTION TO HEATING SYSTEM ↓

"Lipovica radiators can be connected directly to the warm-water central heating system at up to 6 bars. The heating medium in the radiators is softened or demineralised water. Taking into consideration the corrosive stability of the Lipovica radiators, the use of medium depends only on the hot-water sources and heat exchangers.

In smaller (individual) heating systems, raw water may be sued as the heating medium. In larger direct and indirect systems used for distributing heat, the quality of hot water in the network must meet water quality as stipulated by the valid standards. The pH value of demineralised or softened water should be maintained within the limits of 7-9.5, whereas the normal content of hydrazine and alkaline chemicals is permitted in accordance with the requirements for quality drinking water from hot-water boilers or recirculating hot water.

It is recommended that particular sections of the system be closed if no safety mechanisms have been installed. Due to significantly different coefficients for the dispersion of the heating medium and the radiator itself, there may occur significant changes in the closed part of the central heating system. In the most severe circumstances this may cause cracks in the radiators.

COLOURING AND PACKAGING THE RADIATORS

The surface preparation process for colouring the radiator and the colouring processes itself is completely automated. All systems are a closed type exerting a minimal environmental impact from the varnishing chamber. Prior to the radiator colouring process, the external surface area of the radiator is cleaned of all impurities. Simultaneously during this process, the chemical treatment of the radiator surface is carried out in order to achieve maximum corrosion stability.

In the next phase, application of the colour primer is carried out on the whole surface of the radiator. The colour primer is applied by electrostatic immersion of the radiator in a particular colour. The colour primer provides sufficient corrosion protection for the radiator. The next phase is electrostatic application of a powder colour on the primer colour. After the application of the programmed layer of powder colour, a colour polymerisation process is carried out in a furnace. Following a colour stabilisation period and final verification of each particular radiator section, the radiators are packed on the packaging line. The sides of the radiators are protected using carton covers, whereas the whole section is wrapped in heat shrinking wrap.

Each radiator section is designated by a barcode in order to identify its position in the sales chain. The radiator sections are placed on standardised pallets or if it's an order, they're placed on specially designated pallets.

Besides manufacturing radiators, the factory also produces columns in two sizes for segregating pedestrian zones – those with and without handles.

Lipovica has experience and know-how in the manufacturing of various types of gravity casts for various industries.

THE STANDARD COLOUR IS WHITE, RAL 9016, AND THERE IS AL SO THE OPPORTUNITY OF CHOOSING COLOURS FROM THE LIPOVICA COLOUR PALLET.

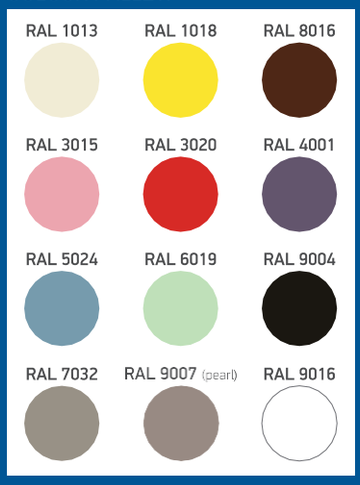

Orion 350/500/600

The Orion radiator is a third generation of our production and continues the tradition of our predecessor's quality. It was developed and manufactured in 2005 by analysing market trends and tracking buyers needs and fully adapting it to market requirement. It has a very modern and contemporary design while maintaining all the qualities and advantages that come with Lipovica radiators. With its curved soft lines is has acquired the epithet of being a safe radiator and suitable for areas where necessary to avoid sharp furniture edges, and is particular suitable for areas where children reside. It's ideal for school nurseries, schools, and pupil dorms since its extraordinary efficiency heats any area, placing safety and ease of mind at the highest level. On account of its qualities, efficiency and beauty, Orion has ensured its position on the market.

Orion

Besides Orion, a special product line called Orion+ has been developed providing a connection to installations carried out from walls or floors. Orion and Orion + are manufactured in 3 sizes: Orion 600, Orion 500 and Orion 350, with the 95 mm depth is standard for all heights.

ORION			350/95	500/95	600/95
A	Column height	mm	430	580	680
B	Coupling size	mm	350	500	600
C	Column width	mm	80	80	80
D	Mounting depth	mm	95	95	95
	Colum weight	kg	1.07	1.13	1.61
	Water content in column	l	0,30	0,34	0,38
	Heating area	m²/col.	0,36	0,51	0,61
	Heating effect 90/70/20˚C	W/col.	113	163	185
	Heating effect 75/65/20˚C	W/col.	89	128	145
	Heating effect 55/45/20˚C	W/col.	45	65	73
	Heating effect exponent	n	1,31	1,32	1,33

Orion 350/95

Orion 350 is a lower radiator with a modern design which, due to its larger mounting depth, has a greater thermal effect. Heat is transmitted instantaneously, even at lower incoming temperatures. Due to its height, it is very suitable for attics, sales areas, exhibitions, along glass sections and in any place where there is limited height for the radiator. Connecting the columns is carried out using 1 inch couplers and 1 inch seals. The interval between the connections is 350 mm, with a total height of 430 mm and a 95 mm depth. It can be connected to and combined with the Orion 350+, where the connection can come from the floor or wall, from the left-hand side or right-hand side of the radiator.

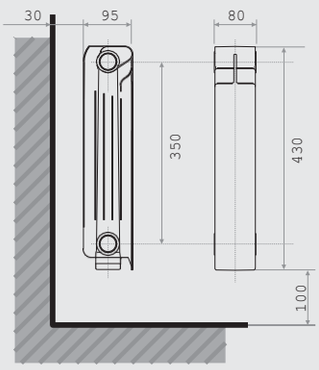

ORION 350

NUM. OF COLUMNS	LENGTH, mm	WATER CONTENT, L	SECTION WEIGHT, KG	HEATING EFFECTS W, AT ΔT °C		
				60	50	30
1	80	0.30	1.07	113	89	45
2	160	0.60	2.34	226	178	90
3	240	0.90	3.51	339	267	135
4	320	1.20	4.68	452	356	180
5	400	1.50	5.85	565	445	225
6	480	1.80	7.02	678	534	270
7	560	2.10	8.19	791	623	315
8	640	2.40	9.36	904	712	360
9	720	2.70	10.53	1017	801	405
10	800	3.00	11.70	1130	890	450
11	880	3.30	12.87	1243	979	495
12	960	3.60	14.04	1356	1068	540
13	1,040	3.90	15.21	1469	1157	585
14	1,120	4.20	16.38	1582	1246	630
15	1,200	4.50	17.55	1695	1335	675
16	1,280	4.80	18.72	1808	1424	720
17	1,360	5.10	19.89	1921	1513	765
18	1,440	5.40	21.06	2034	1602	810
19	1,520	5.70	22.23	2147	1691	855
20	1,600	6.00	23.40	2260	1780	900

TEHNICAL CHARACTERISTICS

COLUMN HEIGHT	COUPLING SIZE	COLUMN WIDTH	MOUNTING DEPTH	COLUMN WEIGHT	WATER CONT. IN COLUMN	HEATING EFFECT
mm	mm	mm	mm	kg	l	m²/col
430	350	80	95	1.07	0.30	0.36

HEATING EFFECT

90 / 70 / 20 °C	75 / 65 / 20 °C	55 / 45 / 20 °C	HEATING EFFECT EXPONENT
Δt 60	Δt 50	Δt 30	—
W / col	W / col	W / col	n
113	89	45	1.31

TABLE OF CALCULATIONS FOR HEAT EFFECT FROM RADIATORS AT VARIOUS TEMPERATURES FOR WATER AND HEATED AREAS, W

ORION 350 (at Δt-t50, Qn=89 W/col. according to HRN EN 442-2)

ti (°C)	tr	to - radiator water output temperature, (°C) and the heat effect in W												
		25	30	35	40	45	50	55	60	65	70	75	80	85
90	24	53	58	63	68	74	80	85	91	97	103	109	115	121
	22	57	62	67	73	78	84	90	96	102	108	114	120	126
	20	61	66	72	77	83	89	95	101	107	113	119	125	131
	18	65	71	76	82	88	93	99	105	111	118	124	130	137
	15	72	77	83	89	95	101	107	113	119	125	131	138	144
	12	78	84	90	96	102	108	114	120	126	133	139	146	152
85	24	47	53	58	63	68	74	80	85	91	97	103	109	
	22	52	57	62	67	73	78	84	90	96	102	108	114	
	20	56	61	66	72	77	83	89	95	101	107	113	119	
	18	60	65	71	76	82	88	93	99	105	111	118	124	
	15	66	72	77	83	89	95	101	107	113	119	125	131	
	12	73	78	84	90	96	102	108	114	120	126	133	139	
80	24	43	47	53	58	63	68	74	80	85	91	97		
	22	46	52	57	62	67	73	78	84	90	96	102		
	20	51	56	61	66	72	77	83	89	95	101	107		
	18	55	60	65	71	76	82	88	93	99	105	111		
	15	61	66	72	77	83	89	95	101	107	113	119		
	12	67	73	78	84	90	96	102	108	114	120	126		
75	24	38	43	47	53	58	63	68	74	80	85			
	22	42	46	51	56	62	67	72	78	83	89			
	20	45	51	56	61	66	72	77	83	89	95			
	18	49	55	60	65	71	76	82	88	93	99			
	15	56	61	66	72	77	83	89	95	101	107			
	12	62	67	73	78	84	90	96	102	108	114			
70	24	33	38	43	47	53	58	63	68	74				
	22	37	42	46	52	57	62	67	73	78				
	20	41	45	51	56	61	66	72	77	83				
	18	44	49	55	60	65	71	76	82	88				
	15	51	56	61	66	72	77	83	89	95				
	12	57	62	67	73	78	84	90	96	102				
65	24	29	33	38	43	47	53	58	63					
	22	32	37	42	46	52	57	62	67					
	20	36	41	45	51	56	61	66	72					
	18	40	44	49	55	60	65	71	76					
	15	45	51	56	61	66	72	77	83					
	12	52	57	62	67	73	78	84	90					
60	24	24	29	33	38	43	47	53						
	22	28	32	37	42	46	52	57						
	20	31	36	41	45	51	56	61						
	18	35	40	44	49	55	60	65						
	15	41	45	51	56	61	66	72						
	12	53	58	63	68	74	80	85						
55	24	20	24	29	33	38	43							
	22	23	28	32	37	42	46							
	20	27	31	36	41	45	51							
	18	30	35	40	44	49	55							
	15	36	41	45	51	56	61							
	12	42	46	52	57	62	67							
50	24	16	20	24	29	33								
	22	19	23	28	32	37								
	20	22	27	31	36	41								
	18	26	30	35	40	44								
	15	31	36	41	45	51								
	12	37	42	46	52	57								
45	24	12	16	20	24									
	22	15	19	23	28									
	20	18	22	27	31									
	18	22	26	30	35									
	15	27	31	36	41									
	12	32	37	42	46									
40	24	9	12	16										
	22	12	15	19										
	20	14	18	22										
	18	18	22	26										
	15	22	27	31										
	12	28	32	37										

$Q = KM^*\Delta t^n = Km^* [(ti+to)/2-tr]^n$, W
for Orion 350, Km = 0.5313, n = 1.3083

- **Δt** difference in temperature of the heated area and average water temperature in the radiator (°C)
- **ti** radiator water input temperature (°C)
- **to** radiator water output temperature (°C)
- **tr** temperature of the heated area (°C)

EXAMPLE: for ti = 90 °C / to = 75 °C / tr = 20 °C
is read from the heat effect table 119 W/col. O 350

Orion 500/95

Orion 500 is a real beauty with its design transforming any area into modern surroundings. Its large heating ability is comparable to the old Ekonomik, and can convert a cold area into a warm and pleasant ambient is a very short time. Connecting the columns is carried out using 1 inch couplers and 1 inch seals. The interval between the couplers is 500 mm, with a total height of 580 mm and a depth of 95 mm. It can be combined with the Orion 500+, with the connection being a floor or wall type and situated on the left-hand or right-hand side of the radiator.

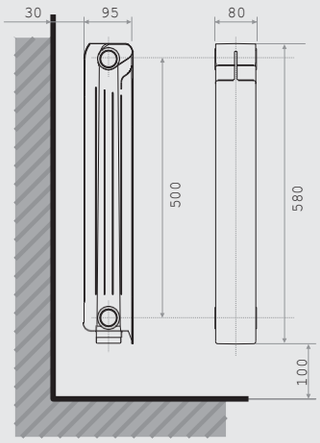

ORION 500

NUM. OF COLUMNS	LENGTH, mm	WATER CONTENT, l	SECTION WEIGHT, kg	HEATING EFFECTS W, at Δt °C		
				60	50	30
1	80	0.34	1.42	162	128	65
2	160	0.68	3.02	324	256	130
3	240	1.02	4.53	486	384	195
4	320	1.36	6.04	648	512	260
5	400	1.70	7.55	810	640	325
6	480	2.04	9.06	972	768	390
7	560	2.38	10.57	1134	896	455
8	640	2.72	12.08	1296	1024	520
9	720	3.06	13.59	1458	1152	585
10	800	3.40	15.10	1620	1280	650
11	880	3.74	16.61	1782	1408	715
12	960	4.08	18.12	1944	1536	780
13	1,040	4.42	19.63	2106	1664	845
14	1,120	4.76	21.14	2268	1792	910
15	1,200	5.10	22.65	2430	1920	975
16	1,280	5.44	24.16	2592	2048	1040
17	1,360	5.78	25.67	2754	2176	1105
18	1,440	6.12	27.18	2916	2304	1170
19	1,520	6.46	28.69	3078	2432	1235
20	1,600	6.80	30.20	3240	2560	1300

TEHNICAL CHARACTERISTICS

COLUMN HEIGHT	COUPLING SIZE	COLUMN WIDTH	MOUNTING DEPTH	COLUMN WEIGHT	WATER CONT. IN COLUMN	HEATING EFFECT
mm	mm	mm	mm	kg	l	m²/col
580	500	80	95	1.32	0.34	0.51

HEATING EFFECT

90 / 70 / 20 °C	75 / 65 / 20 °C	55 / 45 / 20 °C	HEATING EFFECT EXPONENT
Δt 60	Δt 50	Δt 30	—
W / col	W / col	W / col	n
162	128	65	1.32

TABLE OF CALCULATIONS FOR HEAT EFFECT FROM RADIATORS AT VARIOUS TEMPERATURES FOR WATER AND HEATED AREAS, W

ORION 500 (at Δt-t50, Qn=128 W/col. according to HRN EN 442-2)

ti (°C)	tr	to - radiator water output temperature, (°C) and the heat effect in W												
		25	30	35	40	45	50	55	60	65	70	75	80	85
90	24	75	83	90	98	106	114	123	131	140	148	157	166	175
	22	81	89	97	105	113	121	129	138	146	155	164	173	182
	20	87	95	103	111	119	128	136	145	153	162	171	180	190
	18	94	101	109	118	126	134	143	152	161	170	179	188	197
	15	103	111	119	128	136	145	153	162	171	180	190	199	208
	12	113	121	129	138	146	155	164	173	182	192	201	210	220
85	24	68	75	83	90	98	106	114	123	131	140	148	157	
	22	74	81	89	97	105	113	121	129	138	146	155	164	
	20	80	87	95	103	111	119	128	136	145	153	162	171	
	18	86	94	101	109	118	126	134	143	152	161	170	179	
	15	95	103	111	119	128	136	145	153	162	171	180	190	
	12	105	113	121	129	138	146	155	164	173	182	192	201	
80	24	61	68	75	83	90	98	106	114	123	131	140		
	22	66	74	81	89	97	105	113	121	129	138	146		
	20	72	80	87	95	103	111	119	128	136	145	153		
	18	78	86	94	101	109	118	126	134	143	152	161		
	15	87	95	103	111	119	128	136	145	153	162	171		
	12	97	105	113	121	129	138	146	155	164	173	182		
75	24	54	61	68	75	83	90	98	106	114	123			
	22	59	66	74	81	89	97	105	113	121	129			
	20	65	72	80	87	95	103	111	119	128	136			
	18	71	78	86	94	101	109	118	126	134	143			
	15	80	87	95	103	111	119	128	136	145	153			
	12	89	97	105	113	121	129	138	146	155	164			
70	24	47	54	61	68	75	83	90	98	106				
	22	53	59	66	74	81	89	97	105	113				
	20	58	65	72	80	87	95	103	111	119				
	18	64	71	78	86	94	101	109	118	126				
	15	72	80	87	95	103	111	119	128	136				
	12	81	89	97	105	113	121	129	138	146				
65	24	41	47	54	61	68	75	83	90					
	22	46	53	59	66	74	81	89	97					
	20	51	58	65	72	80	87	95	103					
	18	57	64	71	78	86	94	101	109					
	15	65	72	80	87	95	103	111	119					
	12	74	81	89	97	105	113	121	129					
60	24	34	41	47	54	61	68	75						
	22	39	46	53	59	66	74	81						
	20	45	51	58	65	72	80	87						
	18	50	57	64	71	78	86	94						
	15	58	65	72	80	87	95	103						
	12	75	83	90	98	106	114	123						
55	24	28	34	41	47	54	61							
	22	33	39	46	53	59	66							
	20	38	45	51	58	65	72							
	18	43	50	57	64	71	78							
	15	51	58	65	72	80	87							
	12	59	66	74	81	89	97							
50	24	23	28	34	41	47								
	22	27	33	39	46	53								
	20	32	38	45	51	58								
	18	37	43	50	57	64								
	15	45	51	58	65	72								
	12	53	59	66	74	81								
45	24	17	23	28	34									
	22	22	27	33	39									
	20	26	32	38	45									
	18	31	37	43	50									
	15	38	45	51	58									
	12	46	53	59	66									
40	24	12	17	23										
	22	16	22	27										
	20	20	26	32										
	18	25	31	37										
	15	32	38	45										
	12	39	46	53										

$Q = KM*\Delta t^n = Km*[(ti+to)/2-tr]^n$, W

for Orion 500, Km = 0.7318, n = 1.3194

- **Δt** difference in temperature of the heated area and average water temperature in the radiator (°C)
- **ti** radiator water input temperature (°C)
- **to** radiator water output temperature (°C)
- **tr** temperature of the heated area (°C)

EXAMPLE: for ti = 90 °C / to = 75 °C / tr = 20 °C is read from the heat effect table 171 W/col. O 500

Orion 600/95

Orion 600 is the most powerful radiator in the range. The heating power will fulfil all the needs of those who miss the Ekonomik. Its designer appearance will dominate any area, and its powerful heating is the best choice for areas that aren't adequately thermally insulated or where doors are often left open in hallways. It's ideal for the living area where it will ensure the desired temperature and a pleasant ambient even during the harshest winters. Connecting the columns is carried out using 1 inch couplers and 1 inch seals. The interval between the couplers is 600 mm, with a total height of 680 mm and a depth of 95 mm. It can be combined with the Orion 600+, with the connection being a floor or wall type and situated on the left-hand or right-hand side of the radiator.

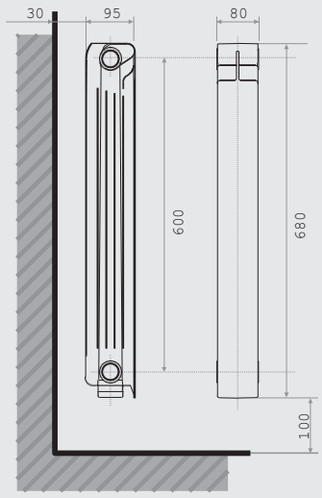

ORION 600

NUM. OF COLUMNS	LENGTH, mm	WATER CONTENT, l	SECTION WEIGHT, kg	HEATING EFFECTS W, AT ΔT °C		
				60	50	30
1	80	0.38	1.61	185	145	73
2	160	0.76	3.40	370	290	146
3	240	1.14	5.10	555	435	219
4	320	1.52	6.80	740	580	292
5	400	1.90	8.50	925	725	365
6	480	2.28	10.20	1110	870	438
7	560	2.66	11.90	1295	1015	511
8	640	3.04	13.60	1480	1160	584
9	720	3.42	15.30	1665	1305	657
10	800	3.80	17.00	1850	1450	730
11	880	4.18	18.70	2035	1595	803
12	960	4.56	20.40	2220	1740	876
13	1,040	4.94	22.10	2405	1885	949
14	1,120	5.32	23.80	2590	2030	1022
15	1,200	5.70	25.50	2775	2175	1095
16	1,280	6.08	27.20	2960	2320	1168
17	1,360	6.46	28.90	3145	2465	1241
18	1,440	6.84	30.60	3330	2610	1314
19	1,520	7.22	32.30	3515	2755	1387
20	1,600	7.60	34.00	3700	2900	1460

TEHNICAL CHARACTERISTICS

COLUMN HEIGHT	COUPLING SIZE	COLUMN WIDTH	MOUNTING DEPTH	COLUMN WEIGHT	WATER CONT. IN COLUMN	HEATING EFFECT
mm	mm	mm	mm	kg	l	m²/col
680	600	80	95	1.54	0.38	0.61

HEATING EFFECT

90 / 70 / 20 °C	75 / 65 / 20 °C	55 / 45 / 20 °C	HEATING EFFECT EXPONENT
Δt 60	Δt 50	Δt 30	—
W / col	W / col	W / col	n
185	145	73	1.33

TABLE OF CALCULATIONS FOR HEAT EFFECT FROM RADIATORS AT VARIOUS TEMPERATURES FOR WATER AND HEATED AREAS, W

ORION 600 (at Δt-50, Qn=145 W/col. according to HRN EN 442-2)

ti (°C)	tr	to - radiator water output temperature, (°C) and the heat effect in W												
		25	30	35	40	45	50	55	60	65	70	75	80	85
90	24	85	94	102	111	120	130	139	149	159	168	179	189	199
	22	92	101	109	118	128	137	147	157	166	176	187	197	208
	20	99	108	117	126	135	145	155	164	174	185	195	205	216
	18	106	115	124	133	143	153	162	172	183	193	203	214	225
	15	117	126	135	145	155	164	174	185	195	205	216	227	238
	12	128	137	147	157	166	176	187	197	208	218	229	240	251
85	24	77	85	94	102	111	120	130	139	149	159	168	179	
	22	83	92	101	109	118	128	137	147	157	166	176	187	
	20	90	99	108	117	126	135	145	155	164	174	185	195	
	18	97	106	115	124	133	143	153	162	172	183	193	203	
	15	108	117	126	135	145	155	164	174	185	195	205	216	
	12	118	128	137	147	157	166	176	187	197	208	218	229	
80	24	69	77	85	94	102	111	120	130	139	149	159		
	22	75	83	92	101	109	118	128	137	147	157	166		
	20	82	90	99	108	117	126	135	145	155	164	174		
	18	88	97	106	115	124	133	143	153	162	172	183		
	15	99	108	117	126	135	145	155	164	174	185	195		
	12	109	118	128	137	147	157	166	176	187	197	208		
75	24	61	69	77	85	94	102	111	120	130	139			
	22	67	75	83	92	101	109	118	128	137	147			
	20	73	82	90	99	108	117	126	135	145	155			
	18	80	88	97	106	115	124	133	143	153	162			
	15	90	99	108	117	126	135	145	155	164	174			
	12	101	109	118	128	137	147	157	166	176	187			
70	24	53	61	69	77	85	94	102	111	120				
	22	59	67	75	83	92	101	109	118	128				
	20	65	73	82	90	99	108	117	126	135				
	18	72	80	88	97	106	115	124	133	143				
	15	82	90	99	108	117	126	135	145	155				
	12	92	101	109	118	128	137	147	157	166				
65	24	46	53	61	69	77	85	94	102					
	22	52	59	67	75	83	92	101	109					
	20	58	65	73	82	90	99	108	117					
	18	64	72	80	88	97	106	115	124					
	15	73	82	90	99	108	117	126	135					
	12	83	92	101	109	118	128	137	147					
60	24	39	46	53	61	69	77	85						
	22	44	52	59	67	75	83	92						
	20	50	58	65	73	82	90	99						
	18	56	64	72	80	88	97	106						
	15	65	73	82	90	99	108	117						
	12	85	94	102	111	120	130	139						
55	24	32	39	46	53	61	69							
	22	37	44	52	59	67	75							
	20	43	50	58	65	73	82							
	18	49	56	64	72	80	88							
	15	58	65	73	82	90	99							
	12	67	75	83	92	101	109							
50	24	25	32	39	46	53								
	22	30	37	44	52	59								
	20	36	43	50	58	65								
	18	41	49	56	64	72								
	15	50	58	65	73	82								
	12	59	67	75	83	92								
45	24	19	25	32	39									
	22	24	30	37	44									
	20	29	36	43	50									
	18	34	41	49	56									
	15	43	50	58	65									
	12	52	59	67	75									
40	24	14	19	25										
	22	18	24	30										
	20	23	29	36										
	18	28	34	41										
	15	36	43	50										
	12	44	52	59										

$$Q = Km*\Delta tn = Km*[(ti+to)/2-tr]n, W$$

for Orion 600, Km = 0.7917, n = 1.3316

- **Δt** difference in temperature of the heated area and average water temperature in the radiator (°C)
- **ti** radiator water input temperature (°C)
- **to** radiator water output temperature (°C)
- **tr** temperature of the heated area (°C)

EXAMPLE: for ti = 90 °C / to = 75 °C / tr = 20 °C is read from the heat effect table 195 W/col. O 600

Solar 350/500/600/700

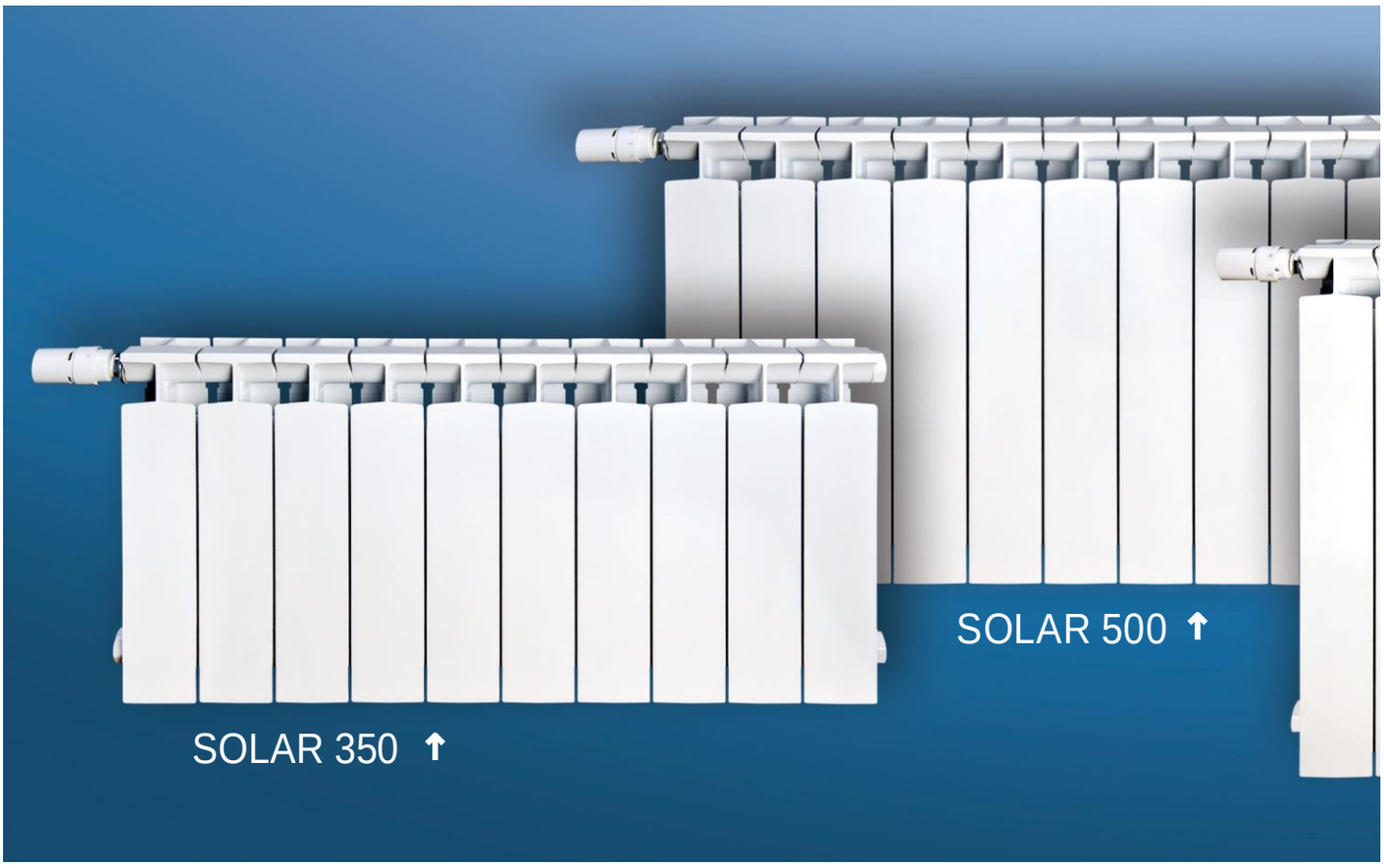

The other family of out radiators carries the name of Solar. It's a second-generation aluminium radiator that was produced in 1994. It resulted from careful research into the wants of buyers and we consequently provided a sought after aesthetical product. The unobtrusive and elegant shape has not lost the excellent thermal characteristics of its predecessor.

Thanks to the quality aluminium alloy from which it is made, it provides high thermal conduction and the ability to quickly heat rooms, not to mention its durability and safety. On account of its straight lines, it doesn't attract dust and is exceptionally suitable due to easy maintenance and cleaning. Having said all of this, it's ideal for areas that require stringent hygienic conditions such as hospitals, medical clinics, hotels and schools. Solar is an excellent choice for domes and areas that favour a simple and minimalistic interior design, as well as areas that prefer a discrete source of heating, but which nonetheless provides powerful heating.

solar

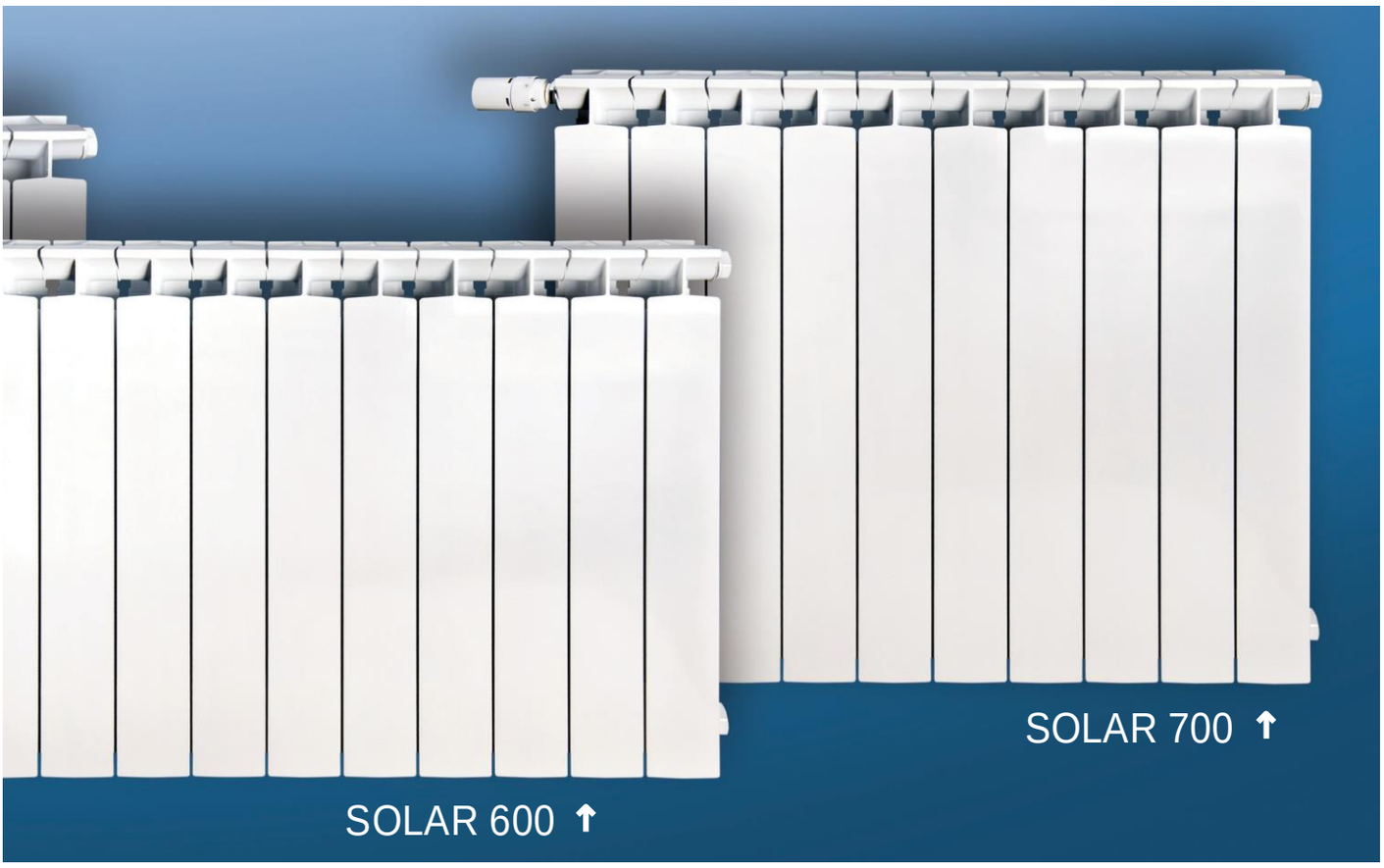

Along with the Solar, not to mention the Orion, a special Solar+ radiator has been developed which allows connections to be made to wall or floor installations. Solar and Solar+ are manufactured in 4 different sizes: Solar 700, Solar 600, Solar 500 and Solar 350, with the depth and width for all heights is 80 mm.

SOLAR			350/80	500/80	600/80	700/80
A	Column height	mm	426	576	676	776
B	Coupling size	mm	350	500	600	700
C	Column width	mm	80	80	80	80
D	Mounting depth	mm	80	80	80	80
	Colum weight	kg	1,02	1,25	1,44	1,75
	Water content in column	l	0,30	0,34	0,38	0,43
	Heating area	m²/col.	0,29	0,41	0,49	0,58
	Heating effect 90/70/20˚C	W/col.	111	147	168	190
	Heating effect 75/65/20˚C	W/col.	88	116	132	149
	Heating effect 55/45/20˚C	W/col.	45	60	68	76
	Heating effect exponent	n	1,29	1,3	1,31	1,32

Solar 350/80

Solar 350/80, has a smaller height and is suitable for areas where the wall height is limited and the area requires a simple and unobtrusive design, such as attic areas and exhibitions as well as window displays. Connecting the column is carried out using 1 inch couplers and 1 inch seals. The interval between the couplers is 350 mm, with a total height of 426 mm and a depth of 80 mm. It can be connected to and combined with the Solar 350+, with the connections being either wall or floor types located on the left-hand side of right-hand side of the radiator.

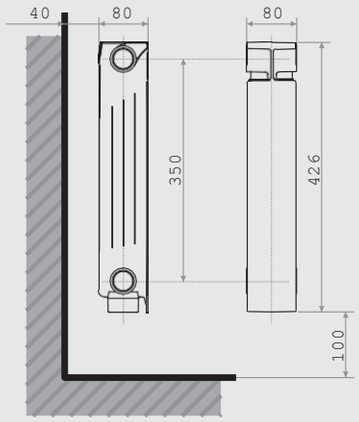

SOLAR 350

NUM. OF COLUMNS	LENGTH, mm	WATER CONTENT, l	SECTION WEIGHT, kg	HEATING EFFECTS W, AT ΔT °C		
				60	50	30
1	80	0.30	1.02	111	88	45
2	160	0.60	2.22	222	176	90
3	240	0.90	3.33	333	264	135
4	320	1.20	4.44	444	352	180
5	400	1.50	5.55	555	440	225
6	480	1.80	6.66	666	528	270
7	560	2.10	7.77	777	616	315
8	640	2.40	8.88	888	704	360
9	720	2.70	9.99	999	792	405
10	800	3.00	11.10	1110	880	450
11	880	3.30	12.21	1221	968	495
12	960	3.60	13.32	1332	1056	540
13	1,040	3.90	14.43	1443	1144	585
14	1,120	4.20	15.54	1554	1232	630
15	1,200	4.50	16.65	1665	1320	675
16	1,280	4.80	17.76	1776	1408	720
17	1,360	5.10	18.87	1887	1496	765
18	1,440	5.40	19.98	1998	1584	810
19	1,520	5.70	21.09	2109	1672	855
20	1,600	6.00	22.20	2220	1760	900

TEHNICAL CHARACTERISTICS

COLUMN HEIGHT	COUPLING SIZE	COLUMN WIDTH	MOUNTING DEPTH	COLUMN WEIGHT	WATER CONT. IN COLUMN	HEATING EFFECT
mm	mm	mm	mm	kg	l	m²/col
426	350	80	80	1.02	0.30	0.29

HEATING EFFECT

90 / 70 / 20 °C	75 / 65 / 20 °C	55 / 45 / 20 °C	HEATING EFFECT EXPONENT
Δt 60	Δt 50	Δt 30	—
W / col	W / col	W / col	n
111	88	45	1.29

TABLE OF CALCULATIONS FOR HEAT EFFECT FROM RADIATORS AT VARIOUS TEMPERATURES FOR WATER AND HEATED AREAS, W

SOLAR 350 (at Δt-60, Qn=104 W/col. according to ISO 3150 and HRN EN 442-2)

ti (°C)	tr	to - radiator water output temperature, (°C) and the heat effect in W												
		25	30	35	40	45	50	55	60	65	70	75	80	85
90	24	52	57	63	68	73	79	84	90	96	101	107	113	119
	22	56	62	67	72	78	83	89	94	100	106	112	118	124
	20	60	66	71	77	82	88	93	99	105	111	117	123	129
	18	65	70	75	81	87	92	98	104	110	116	122	128	134
	15	71	77	82	88	93	99	105	111	117	123	129	135	142
	12	78	83	89	94	100	106	112	118	124	130	137	143	149
85	24	47	52	57	63	68	73	79	84	90	96	101	107	
	22	51	56	62	67	72	78	83	89	94	100	106	112	
	20	55	60	66	71	77	82	88	93	99	105	111	117	
	18	59	65	70	75	81	87	92	98	104	110	116	122	
	15	66	71	77	82	88	93	99	105	111	117	123	129	
	12	72	78	83	89	94	100	106	112	118	124	130	137	
80	24	42	47	52	57	63	68	73	79	84	90	96		
	22	46	51	56	62	67	72	78	83	89	94	100		
	20	50	55	60	66	71	77	82	88	93	99	105		
	18	54	59	65	70	75	81	87	92	98	104	110		
	15	60	66	71	77	82	88	93	99	105	111	117		
	12	67	72	78	83	89	94	100	106	112	118	124		
75	24	38	42	47	52	57	63	68	73	79	84			
	22	41	46	51	56	62	67	72	78	83	89			
	20	45	50	55	60	66	71	77	82	88	93			
	18	49	54	59	65	70	75	81	87	92	98			
	15	55	60	66	71	77	82	88	93	99	105			
	12	62	67	72	78	83	89	94	100	106	112			
70	24	33	38	42	47	52	57	63	68	73				
	22	37	41	46	51	56	62	67	72	78				
	20	41	45	50	55	60	66	71	77	82				
	18	44	49	54	59	65	70	75	81	87				
	15	50	55	60	66	71	77	82	88	93				
	12	56	62	67	72	78	83	89	94	100				
65	24	29	33	38	42	47	52	57	63					
	22	32	37	41	46	51	56	62	67					
	20	36	41	45	50	55	60	66	71					
	18	40	44	49	54	59	65	70	75					
	15	45	50	55	60	66	71	77	82					
	12	51	56	62	67	72	78	83	89					
60	24	24	29	33	38	42	47	52						
	22	28	32	37	41	46	51	56						
	20	31	36	41	45	50	55	60						
	18	35	40	44	49	54	59	65						
	15	41	45	50	55	60	66	71						
	12	52	57	63	68	73	79	84						
55	24	20	24	29	33	38	42							
	22	23	28	32	37	41	46							
	20	27	31	36	41	45	50							
	18	30	35	40	44	49	54							
	15	36	41	45	50	55	60							
	12	41	46	51	56	62	67							
50	24	16	20	24	29	33								
	22	19	23	28	32	37								
	20	23	27	31	36	41								
	18	26	30	35	40	44								
	15	31	36	41	45	50								
	12	37	41	46	51	56								
45	24	12	16	20	24									
	22	15	19	23	28									
	20	19	23	27	31									
	18	22	26	30	35									
	15	27	31	36	41									
	12	32	37	41	46									
40	24	9	12	16										
	22	12	15	19										
	20	15	19	23										
	18	18	22	26										
	15	23	27	31										
	12	28	32	37										

$Q = KM*\Delta t^n = Km*[(tu+ti)/2-tp]^n$, W
for Solar 350, Km = 0.5631, n = 1.2903

- **Δt** difference in temperature of the heated area and average water temperature in the radiator (°C)
- **ti** radiator water input temperature (°C)
- **to** radiator water output temperature (°C)
- **tr** temperature of the heated area (°C)

EXAMPLE: for ti = 90 °C / to = 75 °C / tr = 20 °C
is read from the heat effect table 117 W/col. S 350

Solar 500/80

Simple and elegant, the Solar 500/80 behaves harmoniously in any area. It's ideal for living rooms and areas that require an unobtrusive radiator shape, while ensuring the area a pleasant source of heating. Connecting the columns is carried out using 1 inch couplers and 1 inch seals. The interval between the couplers is 500 mm, with a total height of 576 mm and a depth of 80 mm. It can be combined with the Solar 500+, with the connection being a floor or wall type and situated on the left-hand or right-hand side of the radiator.

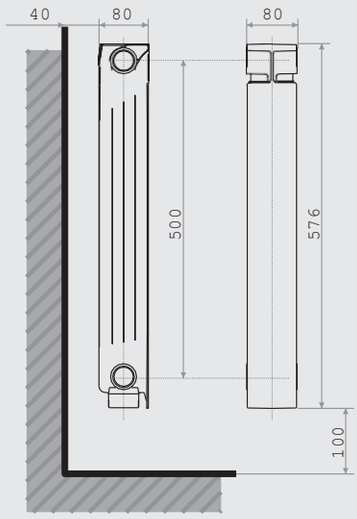

SOLAR 500/80

NUM. OF COLUMNS	LENGTH, mm	WATER CONTENT, l	SECTION WEIGHT, kg	HEATING EFFECTS W, AT ΔT °C		
				60	50	30
1	80	0.34	1.25	147	116	60
2	160	0.68	2.66	294	232	120
3	240	1.02	3.99	441	348	180
4	320	1.36	5.32	588	464	240
5	400	1.70	6.65	735	580	300
6	480	2.04	7.98	882	696	360
7	560	2.38	9.31	1029	812	420
8	640	2.72	10.64	1176	928	480
9	720	3.06	11.97	1323	1044	540
10	800	3.40	13.30	1470	1160	600
11	880	3.74	14.63	1617	1276	660
12	960	4.08	15.96	1764	1392	720
13	1,040	4.42	17.29	1911	1508	780
14	1,120	4.76	18.62	2058	1624	840
15	1,200	5.10	19.95	2205	1740	900
16	1,280	5.44	21.28	2352	1856	960
17	1,360	5.78	22.61	2499	1972	1020
18	1,440	6.12	23.94	2646	2088	1080
19	1,520	6.46	25.27	2793	2204	1140
20	1,600	6.80	26.60	2940	2320	1200

TEHNICAL CHARACTERISTICS

COLUMN HEIGHT	COUPLING SIZE	COLUMN WIDTH	MOUNTING DEPTH	COLUMN WEIGHT	WATER CONT. IN COLUMN	HEATING EFFECT
mm	mm	mm	mm	kg	l	m²/col
576	500	80	80	1.25	0.34	0.41

HEATING EFFECT

90 / 70 / 20 °C	75 / 65 / 20 °C	55 / 45 / 20 °C	EKSPONENT TOPLINSKOG UČINKA
Δt 60	Δt 50	Δt 30	—
W / col	W / col	W / col	n
147	116	60	1.31

TABLE OF CALCULATIONS FOR HEAT EFFECT FROM RADIATORS AT VARIOUS TEMPERATURES FOR WATER AND HEATED AREAS, W

SOLAR 500 (at Δt-60, Qn=145 W/col. according to ISO 3150 and HRN EN 442-2)

ti (°C)	tr	to - radiator water output temperature, (°C) and the heat effect in W												
		25	30	35	40	45	50	55	60	65	70	75	80	85
90	24	69	76	83	90	97	104	112	119	127	135	142	150	158
	22	74	81	88	95	103	110	118	125	133	141	149	157	165
	20	80	87	94	101	109	116	124	131	139	147	155	163	172
	18	85	93	100	107	115	122	130	138	146	154	162	170	178
	15	94	101	109	116	124	131	139	147	155	163	172	180	188
	12	103	110	118	125	133	141	149	157	165	173	181	190	198
85	24	62	69	76	83	90	97	104	112	119	127	135	142	
	22	68	74	81	88	95	103	110	118	125	133	141	149	
	20	73	80	87	94	101	109	116	124	131	139	147	155	
	18	79	85	93	100	107	115	122	130	138	146	154	162	
	15	87	94	101	109	116	124	131	139	147	155	163	172	
	12	95	103	110	118	125	133	141	149	157	165	173	181	
80	24	56	62	69	76	83	90	97	104	112	119	127		
	22	61	68	74	81	88	95	103	110	118	125	133		
	20	66	73	80	87	94	101	109	116	124	131	139		
	18	72	79	85	93	100	107	115	122	130	138	146		
	15	80	87	94	101	109	116	124	131	139	147	155		
	12	88	95	103	110	118	125	133	141	149	157	165		
75	24	50	56	62	69	76	83	90	97	104	112			
	22	55	61	68	74	81	88	95	103	110	118			
	20	60	66	73	80	87	94	101	109	116	124			
	18	65	72	79	85	93	100	107	115	122	130			
	15	73	80	87	94	101	109	116	124	131	139			
	12	81	88	95	103	110	118	125	133	141	149			
70	24	44	50	56	62	69	76	83	90	97				
	22	48	55	61	68	74	81	88	95	103				
	20	53	60	66	73	80	87	94	101	109				
	18	59	65	72	79	85	93	100	107	115				
	15	66	73	80	87	94	101	109	116	124				
	12	74	81	88	95	103	110	118	125	133				
65	24	38	44	50	56	62	69	76	83					
	22	42	48	55	61	68	74	81	88					
	20	47	53	60	66	73	80	87	94					
	18	52	59	65	72	79	85	93	100					
	15	60	66	73	80	87	94	101	109					
	12	68	74	81	88	95	103	110	118					
60	24	32	38	44	50	56	62	69						
	22	36	42	48	55	61	68	74						
	20	41	47	53	60	66	73	80						
	18	46	52	59	65	72	79	85						
	15	53	60	66	73	80	87	94						
	12	69	76	83	90	97	104	112						
55	24	26	32	38	44	50	56							
	22	31	36	42	48	55	61							
	20	35	41	47	53	60	66							
	18	40	46	52	59	65	72							
	15	47	53	60	66	73	80							
	12	55	61	68	74	81	88							
50	24	21	26	32	38	44								
	22	25	31	36	42	48								
	20	30	35	41	47	53								
	18	34	40	46	52	59								
	15	41	47	53	60	66								
	12	48	55	61	68	74								
45	24	16	21	26	32									
	22	20	25	31	36									
	20	24	30	35	41									
	18	29	34	40	46									
	15	35	41	47	53									
	12	42	48	55	61									
40	24	12	16	21										
	22	15	20	25										
	20	19	24	30										
	18	23	29	34										
	15	30	35	41										
	12	36	42	48										

$Q = Km*\Delta tn = Km*[(ti+to)/2-tr]n$, W
for Solar 500, Km = 0.7199, n = 1.2994

- **Δt** difference in temperature of the heated area and average water temperature in the radiator (°C)
- **ti** radiator water input temperature (°C)
- **to** radiator water output temperature (°C)
- **tr** temperature of the heated area (°C)

EXAMPLE: for ti = 90 °C / to = 75 °C / tr = 20 °C
is read from the heat effect table 155 W/col. S 500

Solar 600/80

Our very popular radiator blends in exceptionally well into any area thanks to its elegant and unobtrusive design. It owes its popularity not only to elegance and its nice appearance, but also to its ability to rapidly heat areas. Connecting the columns is carried out using 1 inch couplers and 1 inch seals. The interval between the couplers is 600 mm, with a total height of 676 mm and a depth of 80 mm. It can be combined with the Solar 600+, with the connection being a floor or wall type and situated on the left-hand or right-hand side of the radiator.

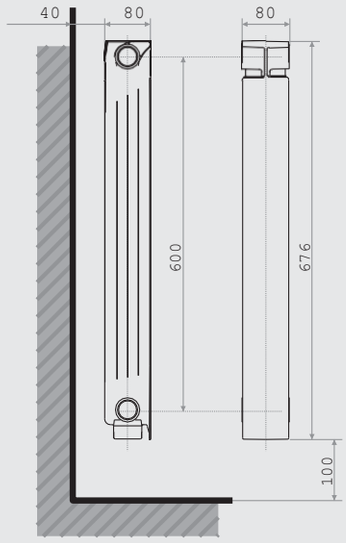

SOLAR 600/80

NUM. OF COLUMNS	LENGTH, mm	WATER CONTENT, l	SECTION WEIGHT, kg	HEATING EFFECTS W, AT ΔT °C		
				60	50	30
1	80	0.38	1.44	168	132	68
2	160	0.76	3.06	336	264	136
3	240	1.14	4.59	504	396	204
4	320	1.52	6.12	672	528	272
5	400	1.90	7.65	840	660	340
6	480	2.28	9.18	1008	792	408
7	560	2.66	10.71	1176	924	476
8	640	3.04	12.24	1344	1056	544
9	720	3.42	13.77	1512	1188	612
10	800	3.80	15.30	1680	1320	680
11	880	4.18	16.83	1848	1452	748
12	960	4.56	18.36	2016	1584	816
13	1,040	4.94	19.89	2184	1716	884
14	1,120	5.32	21.42	2352	1848	952
15	1,200	5.70	22.95	2520	1980	1020
16	1,280	6.08	24.48	2688	2112	1088
17	1,360	6.46	26.01	2856	2244	1156
18	1,440	6.84	27.54	3024	2376	1224
19	1,520	7.22	29.07	3192	2508	1292
20	1,600	7.60	30.60	3360	2640	1360

TEHNICAL CHARACTERISTICS

COLUMN HEIGHT	COUPLING SIZE	COLUMN WIDTH	MOUNTING DEPTH	COLUMN WEIGHT	WATER CONT. IN COLUMN	HEATING EFFECT
mm	mm	mm	mm	kg	l	m²/col
676	600	80	80	1.44	0.38	0.49

HEATING EFFECT

90 / 70 / 20 °C	75 / 65 / 20 °C	55 / 45 / 20 °C	HEATING EFFECT EXPONENT
Δt 60	Δt 50	Δt 30	—
W / col	W / col	W / col	n
168	132	68	1.31

TABLE OF CALCULATIONS FOR HEAT EFFECT FROM RADIATORS AT VARIOUS TEMPERATURES FOR WATER AND HEATED AREAS, W

SOLAR 600 (at Δt-60, Qn=175 W/col. according to ISO 3150 and HRN EN 442-2)

ti (°C)	tr	ti - izlazna temperatura vode iz radijatora, (°C) i toplinski učinak u W												
		25	30	35	40	45	50	55	60	65	70	75	80	85
90	24	78	86	94	102	110	119	127	136	145	154	163	172	181
	22	85	92	100	109	117	126	134	143	152	161	170	179	189
	20	91	99	107	115	124	132	141	150	159	168	177	187	196
	18	97	105	114	122	131	139	148	157	166	175	185	194	204
	15	107	115	124	132	141	150	159	168	177	187	196	206	215
	12	117	126	134	143	152	161	170	179	189	198	208	217	227
85	24	71	78	86	94	102	110	119	127	136	145	154	163	
	22	77	85	92	100	109	117	126	134	143	152	161	170	
	20	83	91	99	107	115	124	132	141	150	159	168	177	
	18	89	97	105	114	122	131	139	148	157	166	175	185	
	15	99	107	115	124	132	141	150	159	168	177	187	196	
	12	109	117	126	134	143	152	161	170	179	189	198	208	
80	24	63	71	78	86	94	102	110	119	127	136	145		
	22	69	77	85	92	100	109	117	126	134	143	152		
	20	75	83	91	99	107	115	124	132	141	150	159		
	18	81	89	97	105	114	122	131	139	148	157	166		
	15	91	99	107	115	124	132	141	150	159	168	177		
	12	100	109	117	126	134	143	152	161	170	179	189		
75	24	56	63	71	78	86	94	102	110	119	127			
	22	62	69	88	96	92	100	109	117	126	134			
	20	68	75	83	91	99	107	115	124	132	141			
	18	74	81	89	97	105	114	122	131	139	148			
	15	83	91	99	107	115	124	132	141	150	159			
	12	92	100	109	117	126	134	143	152	161	170			
70	24	49	56	63	71	78	86	94	102	110				
	22	55	62	69	77	85	92	100	109	117				
	20	61	68	75	83	91	99	107	115	124				
	18	66	74	81	89	97	105	114	122	131				
	15	75	83	91	99	107	115	124	132	141				
	12	85	92	100	109	117	126	134	143	152				
65	24	43	49	56	63	71	78	86	94					
	22	48	55	62	69	77	85	92	100					
	20	53	61	68	75	83	91	99	107					
	18	59	66	74	81	89	97	105	114					
	15	68	75	83	91	99	107	115	124					
	12	77	85	92	100	109	117	126	134					
60	24	36	43	49	56	63	71	78						
	22	41	48	55	62	69	77	85						
	20	47	53	61	68	75	83	91						
	18	52	59	66	74	81	89	97						
	15	61	68	75	83	91	99	107						
	12	78	86	94	102	110	119	127						
55	24	30	36	43	49	56	63							
	22	35	41	48	55	62	69							
	20	40	47	53	61	68	75							
	18	45	52	59	66	74	81							
	15	53	61	68	75	83	91							
	12	62	69	77	85	92	100							
50	24	24	30	36	43	49								
	22	29	35	41	48	55								
	20	34	40	47	53	61								
	18	39	45	52	59	66								
	15	47	53	61	68	75								
	12	55	62	69	77	85								
45	24	18	24	30	36									
	22	23	29	35	41									
	20	27	34	40	47									
	18	32	39	45	52									
	15	40	47	53	61									
	12	48	55	62	69									
40	24	13	18	24										
	22	17	23	29										
	20	22	27	34										
	18	26	32	39										
	15	34	40	47										
	12	41	48	55										

$$Q = Km*\Delta tn = Km*[(ti+to)/2-tr]n, W$$

for Solar 600, Km = 0.7921, n = 1.3085

- **Δt** difference in temperature of the heated area and average water temperature in the radiator (°C)
- **ti** radiator water input temperature (°C)
- **to** radiator water output temperature (°C)
- **tr** temperature of the heated area (°C)

EXAMPLE: for ti = 90 °C / to = 75 °C / tr = 20 °C
is read from the heat effect table 177 W/col. S 600

Solar 700/80

Solar 700/80 is the tallest radiator in our offer. Its heating power is suitable for areas requiring a higher temperature, such as children's rooms, bathrooms and living areas. Its elegant appearance blends in perfectly into any area, and is modern as any contemporary style. Connecting the columns is carried out using 1 inch couplers and 1 inch seals. The interval between the couplers is 700 mm, with a total height of 776 mm and a depth of 80 mm. It can be combined with the Solar 700+, with the connection being a floor or wall type and situated on the left-hand or right-hand side of the radiator.

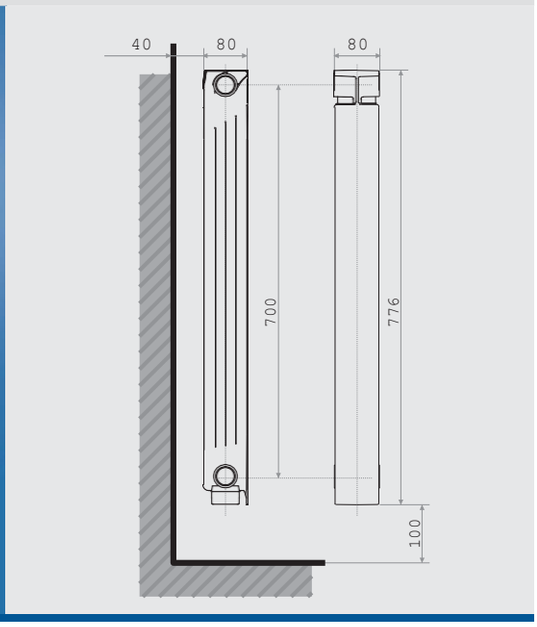

SOLAR 700/80

NUM. OF COLUMNS	LENGHT, mm	WATER CONTENT, l	SECTION WEIGHT, kg	HEATING EFFECTS W, AT ΔT °C		
				60	50	30
1	80	0.43	1.75	190	149	76
2	160	0.86	3.68	380	298	152
3	240	1.29	5.52	570	447	228
4	320	1.72	7.36	760	596	304
5	400	2.15	9.20	950	745	380
6	480	2.58	11.04	1140	894	456
7	560	3.01	12.88	1330	1043	532
8	640	3.44	14.72	1520	1192	608
9	720	3.87	16.56	1710	1341	684
10	800	4.30	18.40	1900	1490	760
11	880	4.73	20.24	2090	1639	836
12	960	5.16	22.08	2280	1788	912
13	1,040	5.59	23.92	2470	1937	988
14	1,120	6.02	25.76	2660	2086	1064
15	1,200	6.45	27.60	2850	2235	1140
16	1,280	6.88	29.44	3040	2384	1216
17	1,360	7.31	31.28	3230	2533	1292
18	1,440	7.74	33.12	3420	2682	1368
19	1,520	8.17	34.96	3610	2831	1444
20	1,600	8.60	36.80	3800	2980	1520

TEHNICAL CHARACTERISTICS

COLUMN HEIGHT	COUPLING SIZE	COLUMN WIDTH	MOUNTING DEPTH	COLUMN WEIGHT	WATER CONT. IN COLUMN	HEATING EFFECT
mm	mm	mm	mm	kg	l	m²/col
776	700	80	80	1.75	0.43	0.58

HEATING EFFECT

90 / 70 / 20 °C	75 / 65 / 20 °C	55 / 45 / 20 °C	HEATING EFFECT EXPONENT
Δt 60	Δt 50	Δt 30	—
W / col	W / col	W / col	n
190	149	76	1.32

TABLE OF CALCULATIONS FOR HEAT EFFECT FROM RADIATORS AT VARIOUS TEMPERATURES FOR WATER AND HEATED AREAS, W

SOLAR 700 (at Δt-50, Qn=166 W/col. according to ISO 3150 and HRN EN 442-2)

ti (°C)	tr	to - radiator water output temperature, (°C) and the heat effect in W												
		25	30	35	40	45	50	55	60	65	70	75	80	85
90	24	88	97	106	115	124	134	144	153	163	174	184	194	205
	22	95	104	113	122	132	142	151	161	172	182	192	203	214
	20	102	111	121	130	140	149	159	169	180	190	201	211	222
	18	109	119	128	138	147	157	167	178	188	199	209	220	231
	15	121	130	140	149	159	169	180	190	201	211	222	233	244
	12	132	142	151	161	172	182	192	203	214	224	235	246	258
85	24	79	88	97	106	115	124	134	144	153	163	174	184	
	22	86	95	104	113	122	132	142	151	161	172	182	192	
	20	93	102	111	121	130	140	149	159	169	180	190	201	
	18	100	109	119	128	138	147	157	167	178	188	199	209	
	15	111	121	130	140	149	159	169	180	190	201	211	222	
	12	122	132	142	151	161	172	182	192	203	214	224	235	
80	24	71	79	88	97	106	115	124	134	144	153	163		
	22	78	86	95	104	113	122	132	142	151	161	172		
	20	85	93	102	111	121	130	140	149	159	169	180		
	18	92	100	109	119	128	138	147	157	167	178	188		
	15	102	111	121	130	140	149	159	169	180	190	201		
	12	113	122	132	142	151	161	172	182	192	203	214		
75	24	63	71	79	88	97	106	115	124	134	144			
	22	69	78	86	95	104	113	122	132	142	151			
	20	76	85	93	102	111	121	130	140	149	159			
	18	83	92	100	109	119	128	138	147	157	167			
	15	93	102	111	121	130	140	149	159	169	180			
	12	104	113	122	132	142	151	161	172	182	192			
70	24	55	63	71	79	88	97	106	115	124				
	22	61	69	78	86	95	104	113	122	132				
	20	68	76	85	93	102	111	121	130	140				
	18	74	83	92	100	109	119	128	138	147				
	15	85	93	102	111	121	130	140	149	159				
	12	95	104	113	122	132	142	151	161	172				
65	24	47	55	63	71	79	88	97	106					
	22	54	61	69	78	86	95	104	113					
	20	60	68	76	85	93	102	111	121					
	18	66	74	83	92	100	109	119	128					
	15	76	85	93	102	111	121	130	140					
	12	86	95	104	113	122	132	142	151					
60	24	40	47	55	63	71	79	88						
	22	46	54	61	69	78	86	95						
	20	52	60	68	76	85	93	102						
	18	58	66	74	83	92	100	109						
	15	68	76	85	93	102	111	121						
	12	88	97	106	115	124	134	144						
55	24	33	40	47	55	63	71							
	22	39	46	54	61	69	78							
	20	45	52	60	68	76	85							
	18	51	58	66	74	83	92							
	15	60	68	76	85	93	102							
	12	69	78	86	95	104	113							
50	24	26	33	40	47	55								
	22	32	39	46	54	61								
	20	37	45	52	60	68								
	18	43	51	58	66	74								
	15	52	60	68	76	85								
	12	61	69	78	86	95								
45	24	20	26	33	40									
	22	25	32	39	46									
	20	30	37	45	52									
	18	36	43	51	58									
	15	45	52	60	68									
	12	54	61	69	78									
40	24	14	20	26										
	22	19	25	32										
	20	24	30	37										
	18	29	36	43										
	15	37	45	52										
	12	46	54	61										

$Q = KM*\Delta t = Km*[(tu+ti)/2-tp]$, W
for Solar 700, Km = 0.8504, n = 1.3213

- **Δt** difference in temperature of the heated area and average water temperature in the radiator (°C)
- **ti** radiator water input temperature (°C)
- **to** radiator water output temperature (°C)
- **tr** temperature of the heated area (°C)

EXAMPLE: for ti = 90 °C / to = 75 °C / tr = 20 °C
is read from the heat effect table 201 W/col. S 700

Plano 350/500/600/700

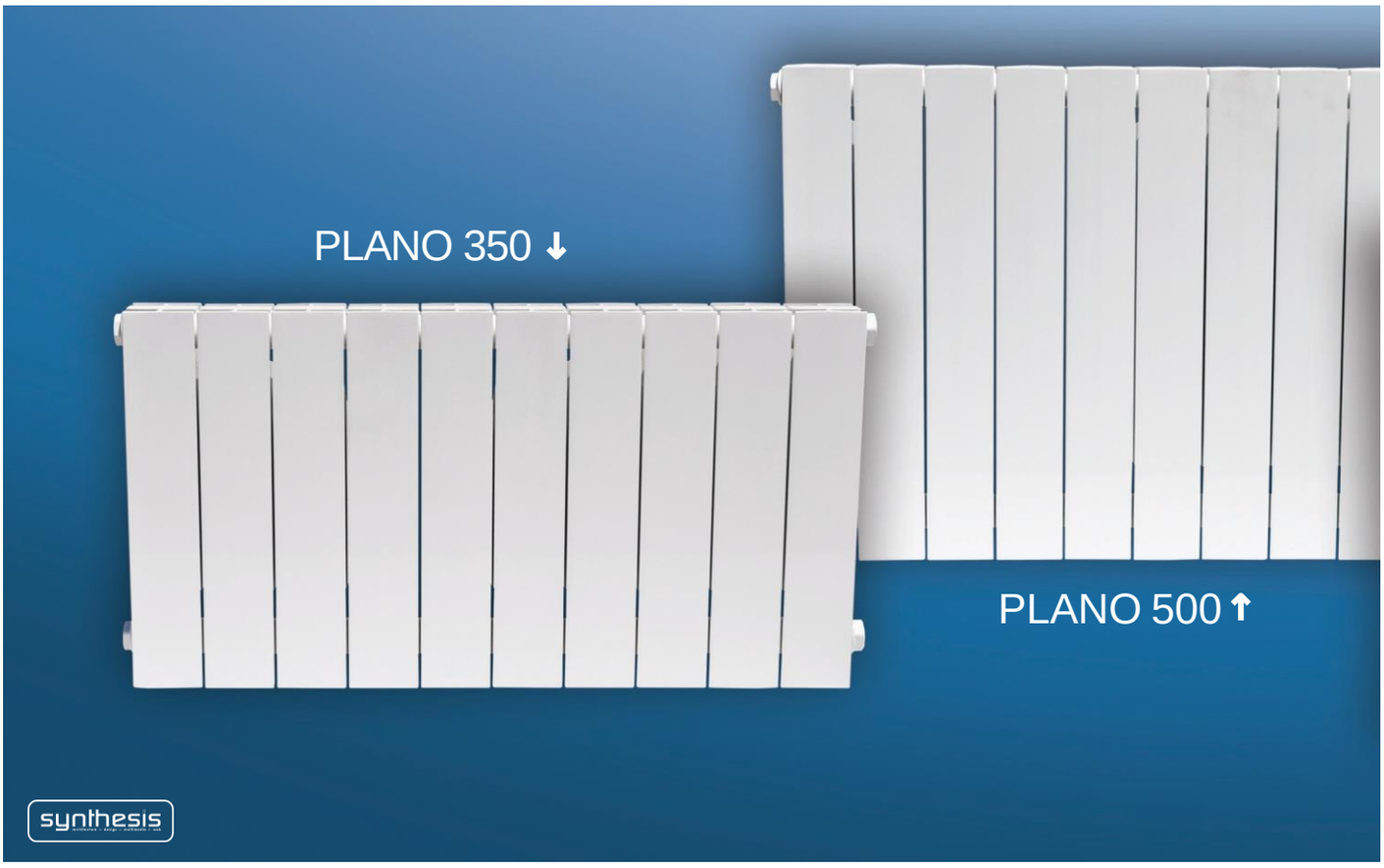

The Plano is our newest radiator. At the beginning of 2015, we began its serial production. The Plano radiator is the answer to the market's need for a hygienic and clean radiator. With its straight and closed profile on the front and back sides, it features an elegant and refined design. Thanks to its straight profile, maintaining and cleaning it is simple because there are no surfaces that retain dust. Hence it is ideal for areas that require high hygienic standards such as hospitals, medical clinics as well as areas where persons that are sensitive to dust reside.
Being elegant and unobtrusive, it blends well into a modern interior.

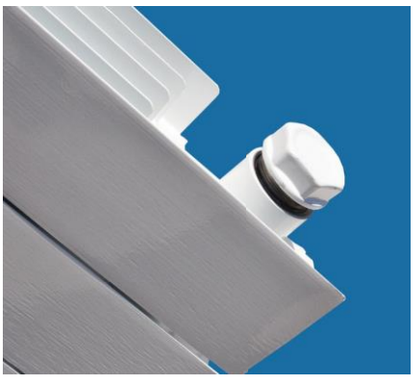

PLANO®

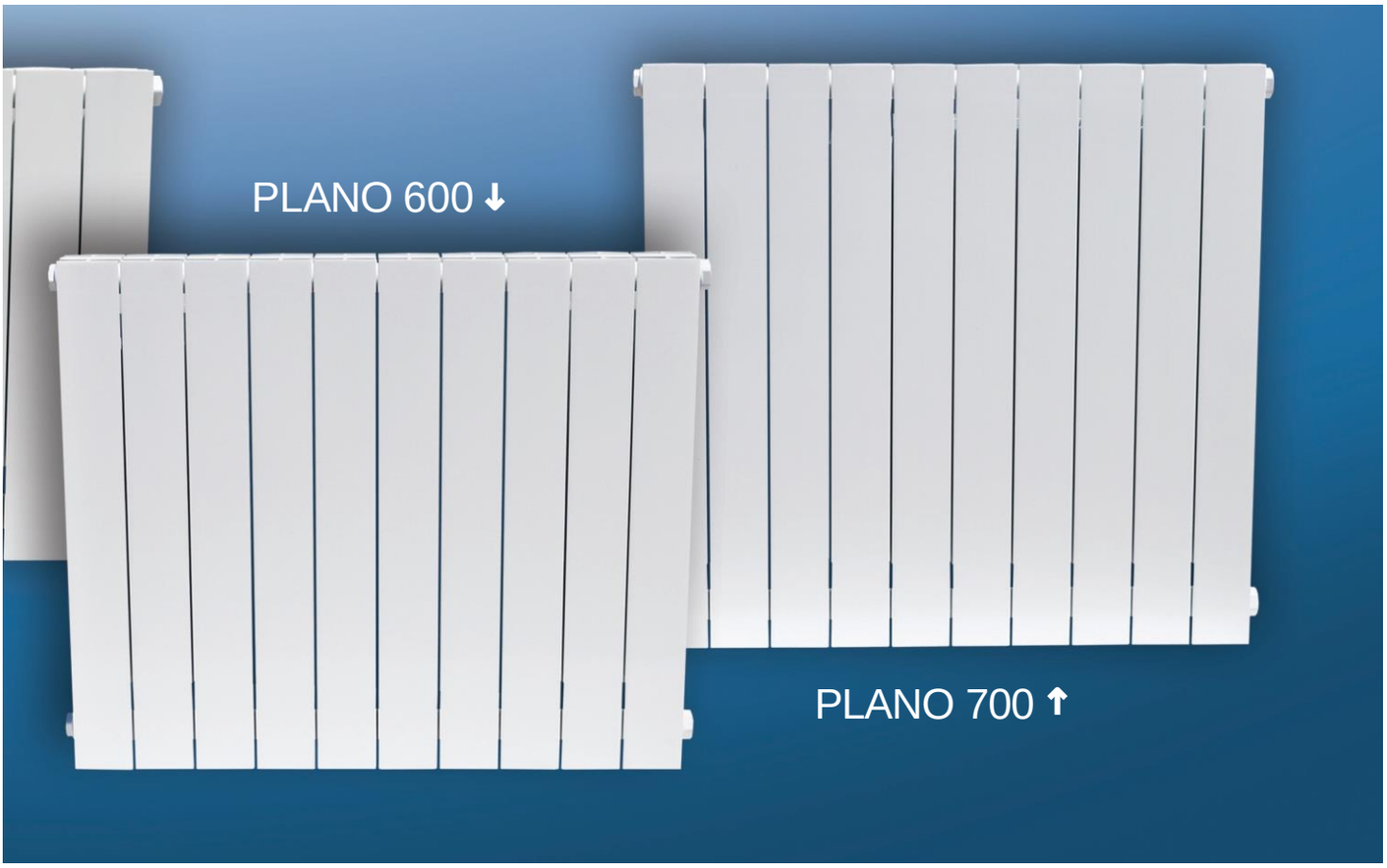

In addition to the Plano, a special product line of the Plano+ has also been developed that allows connections in installation running from walls or floors. The Plano and Plano+ products come in 4 sizes: Plano 700, Plano 600, Plano 500 and Plano 350 with a standard depth of 80 mm for all radiator heights.

PLANO			350/80	500/80	600/80	700/80
A	Column height	mm	426	576	676	776
B	Coupling size	mm	350	500	600	700
C	Column width	mm	80	80	80	80
D	Mounting depth	mm	80	80	80	80
	Colum weight	kg	1,02	1,35	1,56	1,76
	Water content in column	l	0,30	0,34	0,38	0,43
	Heating area	m²/col.	0,30	0,42	0,50	0,59
	Heating effect 90/70/20˚C	W/col.	109	143	158	188
	Heating effect 75/65/20˚C	W/col.	86	113	125	147
	Heating effect 55/45/20˚C	W/col.	45	57	64	75
	Heating effect exponent	n	1,29	1,33	1,30	1,33

Plano 350/80

The Plano 350 is the lowest of the Plano radiators and is intended for areas where restrictions on the height of a radiator exist, such as attic areas, glass partitioning and the like. The connection interval is 350 mm, with a total height of 426 mm and depth of 80 mm. It can be joined to and combined with the Plano 350+, where the connection can be either from the floor or wall, and on the left or right side of the radiator. Furthermore, it can also be set up with the Plano DV 350 in any position in a radiator section.

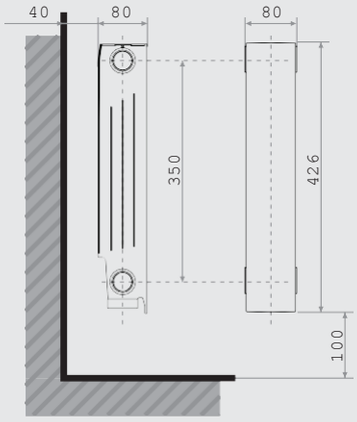

PLANO 350

NUM. OF COLUMNS	LENGTH, mm	WATER CONTENT, l	SECTION WEIGHT, kg	HEATING EFFECTS W, AT ΔT °C		
				60	50	30
1	80	0.30	1.08	109	86.2	45
2	160	0.60	2.20	218	172.4	90
3	240	0.90	3.30	327	258.6	135
4	320	1.20	4.40	436	344.8	180
5	400	1.50	5.50	545	431	225
6	480	1.80	6.60	654	517.2	270
7	560	2.10	7.70	763	603.4	315
8	640	2.40	8.80	872	689.6	360
9	720	2.70	9.90	981	775.8	405
10	800	3.00	11.00	1090	862	450
11	880	3.30	12.10	1199	948.2	495
12	960	3.60	13.20	1308	1034.4	540
13	1,040	3.90	14.30	1417	1120.6	585
14	1,120	4.20	15.40	1526	1206.8	630
15	1,200	4.50	16.50	1635	1293	675
16	1,280	4.80	17.60	1744	1379.2	720
17	1,360	5.10	18.70	1853	1465.4	765
18	1,440	5.40	19.80	1962	1551.6	810
19	1,520	5.70	20.90	2071	1637.8	855
20	1,600	6.00	22.20	2180	1724	900

TEHNICAL CHARACTERISTICS

COLUMN HEIGHT	COUPLING SIZE	COLUMN WIDTH	MOUNTING DEPTH	COLUMN WEIGHT	WATER CONT. IN COLUMN	HEATING EFFECT
mm	mm	mm	mm	kg	l	m²/col
426	350	80	80	1.02	0.30	0.3

HEATING EFFECT

90 / 70 / 20 °C	75 / 65 / 20 °C	55 / 45 / 20 °C	HEATING EFFECT EXPONENT
Δt 60	Δt 50	Δt 30	—
W / col	W / col	W / col	n
109	86	45	1.2845

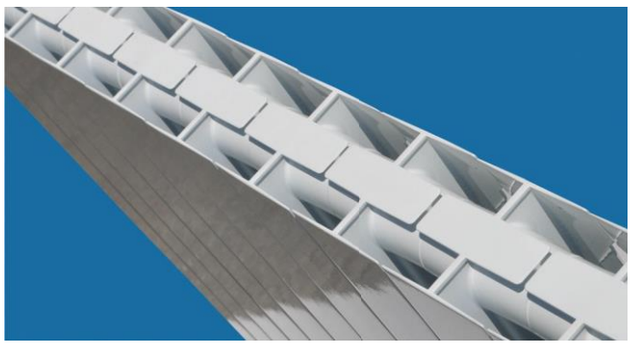

TABLE OF CALCULATIONS FOR HEAT EFFECT FROM RADIATORS AT VARIOUS TEMPERATURES FOR WATER AND HEATED AREAS, W

PLANO 350 (at Δt-t50, Qn =86 W/col. according to HRN EN 442-2)

ti (°C)	tr	to - radiator water output temperature, (°C) and the heat effect in W												
		25	30	35	40	45	50	55	60	65	70	75	80	85
90	24	52	57	62	67	72	77	83	88	94	100	106	111	117
	22	56	61	66	71	76	82	87	93	99	104	110	116	122
	20	60	66	70	76	82	86	92	97	103	109	115	121	127
	18	64	69	74	80	85	91	96	102	108	114	120	126	132
	15	70	75	81	86	92	97	103	109	115	121	127	133	139
	12	76	82	87	93	99	104	110	116	122	128	134	140	146
85	24	47	52	57	62	67	72	77	83	88	94	100	106	
	22	51	56	61	66	71	76	82	87	93	99	104	110	
	20	55	60	65	70	75	81	86	92	97	103	109	115	
	18	59	64	69	74	80	85	91	96	102	108	114	120	
	15	65	70	75	81	86	92	97	103	109	115	121	127	
	12	71	76	82	87	93	99	104	110	116	122	128	134	
80	24	42	47	52	57	62	67	72	77	83	88	94		
	22	46	51	56	61	66	71	76	82	87	93	99		
	20	50	55	60	65	70	75	81	86	92	97	103		
	18	54	59	64	69	74	80	85	91	96	102	108		
	15	60	65	70	75	81	86	92	97	103	109	115		
	12	66	71	76	82	87	93	99	104	110	116	122		
75	24	37	42	47	52	57	62	67	72	77	83			
	22	41	46	51	56	61	66	71	76	82	87			
	20	45	50	55	60	65	70	75	81	86.2	92			
	18	49	54	59	64	69	74	80	85	91	96			
	15	55	60	65	70	76	81	86	92	97	103			
	12	61	66	71	76	82	87	93	99	104	110			
70	24	33	37	42	47	52	57	62	67	72				
	22	36	41	46	51	56	61	66	71	76				
	20	40	45	50	55	60	65	70	75	81				
	18	44	49	54	59	64	69	74	80	85				
	15	50	55	60	65	70	75	81	86	92				
	12	56	61	66	71	76	82	87	93	99				
65	24	28	33	37	42	47	52	57	62					
	22	32	36	41	46	51	56	61	66					
	20	35	40	45	50	55	60	65	70					
	18	39	44	49	54	59	64	69	74					
	15	45	50	55	60	65	70	75	81					
	12	51	56	61	66	71	76	82	87					
60	24	24	28	33	37	42	47	52						
	22	27	32	36	41	46	51	56						
	20	31	35	40	45	50	55	60						
	18	34	39	44	49	54	59	64						
	15	40	45	50	55	60	65	70						
	12	52	57	62	67	72	77	83						
55	24	20	24	28	33	37	42							
	22	23	27	32	36	41	46							
	20	27	31	35	40	44.7	50							
	18	30	34	39	44	49	54							
	15	35	40	45	50	55	60							
	12	41	46	51	56	61	66							
50	24	16	20	24	28	33								
	22	19	23	27	32	36								
	20	22	27	31	35	40								
	18	26	30	34	39	44								
	15	31	35	40	45	50								
	12	36	41	46	51	56								
45	24	12	16	20	24									
	22	15	19	23	27									
	20	18	22	27	31									
	18	22	26	30	34									
	15	27	31	35	40									
	12	32	36	41	46									
40	24	9	12	16										
	22	12	15	19										
	20	15	18	22										
	18	18	22	26										
	15	22	27	31										
	12	27	32	36										

$Q = Km*\Delta tn = Km*[(ti+to)/2-tr]n$, W
for Plano 350, Km = 0.5667, n = 1.2845

- **Δt** difference in temperature of the heated area and average water temperature in the radiator (°C)
- **ti** radiator water input temperature (°C)
- **to** radiator water output temperature (°C)
- **tr** temperature of the heated area (°C)

EXAMPLE: for ti = 90 °C / to = 75 °C / tr = 20 °C
is read from the heat effect table 115 W/col. P 350

Plano 500/80

The Plano 500 is a medium-sized radiator that can be installed in any area. Due to its decent appearance, it blends well into various interior designs, from the modern to classical. The connection interval is 500 mm, with a total height of 576 mm and depth of 80 mm. It can be joined to and combined with the Plano 500+, where the connection can be either from the floor or wall, and on the left or right side of the radiator. Furthermore, it can also be set up with the Plano DV 500 in any position in a radiator section.

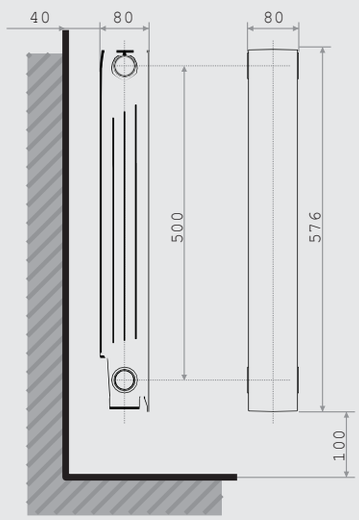

PLANO 500

NUM. OF COLUMNS	LENGTH, mm	WATER CONTENT, l	SECTION WEIGHT, kg	HEATING EFFECTS W, AT ΔT °C		
				60	50	30
1	80	0.34	1.34	143	112.6	57
2	160	0.68	2.76	286	225.2	114
3	240	1.02	4.14	429	337.8	171
4	320	1.36	5.52	572	450.4	228
5	400	1.70	6.90	715	563	285
6	480	2.04	8.28	858	675.6	342
7	560	2.38	9.66	1001	788.2	399
8	640	2.72	11.04	1144	900.8	456
9	720	3.06	12.42	1287	1013.4	513
10	800	3.40	13.80	1430	1126	570
11	880	3.74	15.18	1573	1238.6	627
12	960	4.08	16.56	1716	1351.2	684
13	1,040	4.42	17.94	1859	1463.8	741
14	1,120	4.76	19.32	2002	1576.4	798
15	1,200	5.10	20.70	2145	1689	855
16	1,280	5.44	22.08	2288	1801.6	912
17	1,360	5.78	23.46	2431	1914.2	969
18	1,440	6.12	24.84	2574	2026.8	1026
19	1,520	6.46	26.22	2717	2139.4	1083
20	1,600	6.80	22.20	2860	2252	1140

TEHNICAL CHARACTERISTICS

COLUMN HEIGHT	COUPLING SIZE	COLUMN WIDTH	MOUNTING DEPTH	COLUMN WEIGHT	WATER CONT. IN COLUMN	HEATING EFFECT
mm	mm	mm	mm	kg	l	m²/col
576	500	80	80	1.35	0.30	0.42

HEATING EFFECT

90 / 70 / 20 °C	75 / 65 / 20 °C	55 / 45 / 20 °C	HEATING EFFECT EXPONENT
Δt 60	Δt 50	Δt 30	—
W / col	W / col	W / col	n
143	113	57	1.3262

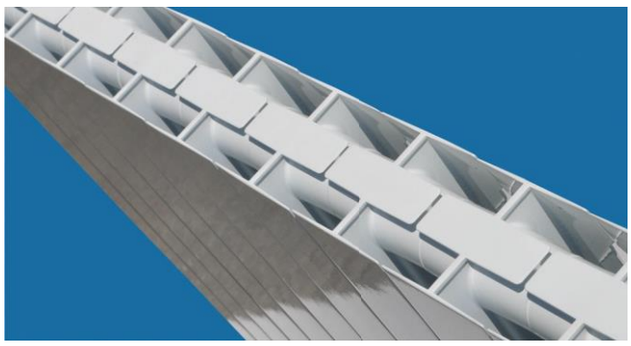

TABLE OF CALCULATIONS FOR HEAT EFFECT FROM RADIATORS AT VARIOUS TEMPERATURES FOR WATER AND HEATED AREAS, W

PLANO 500 (at Δt-t50, Qn =86 W/col. according to HRN EN 442-2)

ti (°C)	tr	to - radiator water output temperature, (°C) and the heat effect in W												
		25	30	35	40	45	50	55	60	65	70	75	80	85
90	24	66	73	80	87	94	101	108	116	123	131	139	147	155
	22	71	78	85	92	99	107	114	122	129	137	145	153	161
	20	77	84	91	98	105	113	120	128	135	143,3	151	159	168
	18	82	89	96	104	111	119	126	134	142	150	158	166	174
	15	91	98	105	113	120	128	135	143	151	159	168	176	184
	12	99	107	114	122	129	137	145	15	161	169	178	186	194
85	24	60	66	73	80	87	94	101	108	116	123	131	139	
	22	65	71	78	85	92	99	107	114	122	129	137	145	
	20	70	77	84	91	98	105	113	120	128	135	143	151	
	18	75	82	89	96	104	111	119	126	134	142	150	158	
	15	84	91	98	105	113	120	128	135	143	151	159	168	
	12	92	99	107	114	122	129	137	145	153	161	169	178	
80	24	53	60	66	73	80	87	94	101	108	116	123		
	22	58	65	71	78	85	92	99	107	114	122	129		
	20	64	70	77	84	91	98	105	113	120	128	135		
	18	69	75	82	89	96	104	111	119	126	134	142		
	15	77	84	91	98	105	113	120	128	135	143	151		
	12	85	92	99	107	115	122	129	137	145	153	161		
75	24	47	53	60	66	73	80	87	94	101	108			
	22	52	58	65	71	78	85	92	99	107	114			
	20	57	64	70	77	84	91	98	105	112,5	120			
	18	62	69	75	82	89	96	104	111	119	126			
	15	70	77	84	91	98	105	113	120	128	135			
	12	78	85	92	99	107	114	122	129	137	145			
70	24	41	47	53	60	66	73	80	87	94				
	22	46	52	58	65	71	78	85	92	99				
	20	51	57	64	70	77	84	91	98	105				
	18	56	62	69	75	82	89	96	104	111				
	15	64	70	77	84	91	98	105	113	120				
	12	71	78	85	92	99	107	115	122	129				
65	24	36	41	47	53	60	66	73	80					
	22	40	46	52	58	65	71	78	85					
	20	45	51	57	64	70	77	84	91					
	18	50	56	62	69	75	82	89	96					
	15	57	64	70	77	84	91	98	105					
	12	65	71	78	85	92	99	107	114					
60	24	30	36	41	47	53	60	66						
	22	34	40	46	52	58	65	71						
	20	39	45	51	57	64	70	77						
	18	44	50	56	62	69	75	82						
	15	51	57	64	70	77	84	91						
	12	66	73	80	87	94	101	108						
55	24	25	30	36	41	47	53							
	22	29	34	40	46	52	58							
	20	33	39	45	51	57,2	64							
	18	38	44	50	56	62	69							
	15	45	51	57	64	70	77							
	12	52	58	65	71	78	85							
50	24	20	25	30	36	41								
	22	24	29	64	40	46								
	20	28	33	39	45	51								
	18	32	38	44	50	56								
	15	39	45	51	57	64								
	12	46	52	58	65	71								
45	24	15	20	25	30									
	22	19	24	29	34									
	20	23	28	33	39									
	18	27	32	38	44									
	15	33	39	45	51									
	12	40	46	52	58									
40	24	11	15	20										
	22	14	19	24										
	20	18	23	28										
	18	22	27	32										
	15	28	33	39										
	12	34	40	46										

Q = Km*Δtn = Km*[(ti+to)/2-tr]n, W
for Plano 500, Km = 0.6283, n = 1.3262

- **Δt** difference in temperature of the heated area and average water temperature in the radiator (°C)
- **ti** radiator water input temperature (°C)
- **to** radiator water output temperature (°C)
- **tr** temperature of the heated area (°C)

EXAMPLE: for ti = 90 °C / to = 75 °C / tr = 20 °C
is read from the heat effect table 151 W/col. P 500

Plano 600/80

Thanks to its straight profile and hygienic characteristics, buyers have come to recognise the Plano 600, as an increasingly common choice for bedrooms, living rooms and the like. It heats any area quickly, and is exceptionally simple to maintain. The connection interval is 600 mm, with a total height of 676 mm and a depth of 80 mm. It can be joined to and combined with the Plano 600+, where the connection can be either from the floor or wall, and on the left or right side of the radiator. Furthermore, it can also be set up with the Plano DV 500 in any position in the radiator section.

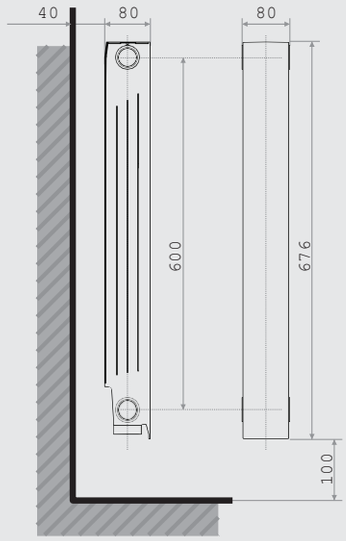

PLANO 600/80

NUM. OF COLUMNS	LENGTH, mm	WATER CONTENT, l	SECTION WEIGHT, kg	HEATING EFFECTS W, AT ΔT °C		
				60	50	30
1	80	0.38	1.46	161	126.9	64
2	160	0.76	3.00	322	253.8	128
3	240	1.14	4.50	483	380.7	192
4	320	1.52	6.00	644	507.6	256
5	400	1.90	7.50	805	634.5	320
6	480	2.28	9.00	966	761.4	384
7	560	2.66	10.50	1127	888.3	448
8	640	3.04	12.00	1288	1015.2	512
9	720	3.42	13.50	1449	1142.1	576
10	800	3.80	15.00	1610	1269	640
11	880	4.18	16.50	1771	1395.9	704
12	960	4.56	18.00	1932	1522.8	768
13	1,040	4.94	19.50	2093	1649.7	832
14	1,120	5.32	21.00	2254	1776.6	896
15	1,200	5.70	22.50	2415	1903.5	960
16	1,280	6.08	24.00	2576	2030.4	1024
17	1,360	6.46	25.50	2737	2157.3	1088
18	1,440	6.84	27.00	2898	2284.2	1152
19	1,520	7.22	28.50	3059	2411.1	1216
20	1,600	7.60	30.00	3220	2538	1280

TEHNICAL CHARACTERISTICS

COLUMN HEIGHT	COUPLING SIZE	COLUMN WIDTH	MOUNTING DEPTH	COLUMN WEIGHT	WATER CONT. IN COLUMN	HEATING EFFECT
mm	mm	mm	mm	kg	l	m²/col
676	600	80	80	1.56	0.38	0.5

HEATING EFFECT

90 / 70 / 20 °C	75 / 65 / 20 °C	55 / 45 / 20 °C	HEATING EFFECT EXPONENT
Δt 60	Δt 50	Δt 30	—
W / col	W / col	W / col	n
158	125	64	1.3043

TABLE OF CALCULATIONS FOR HEAT EFFECT FROM RADIATORS AT VARIOUS TEMPERATURES FOR WATER AND HEATED AREAS, W

PLANO 600 (at Δt-t50, Qn=86 W/col. according to HRN EN 442-2)

ti (°C)	tr	to - radiator water output temperature, (°C) and the heat effect in W												
		25	30	35	40	45	50	55	60	65	70	75	80	85
90	24	74	81	89	69	104	112	120	128	136	145	153	162	170
	22	80	87	95	102	110	118	126	135	143	151	160	169	177
	20	86	93	101	109	117	125	133	141	150	158.1	167	176	184
	18	92	99	107	115	123	131	139	148	156	165	174	183	192
	15	101	109	117	125	133	141	150	158	167	176	184	193	202
	12	110	118	126	135	143	151	160	169	177	186	195	204	213
85	24	67	74	81	89	96	104	112	120	128	136	145	153	
	22	73	80	87	95	102	110	118	126	135	143	151	160	
	20	78	86	93	101	109	117	125	133	141	150	158	167	
	18	84	92	99	107	115	123	131	139	148	156	165	174	
	15	93	101	109	117	125	133	141	150	158	167	176	184	
	12	102	110	118	126	135	143	151	160	169	177	186	195	
80	24	60	67	74	81	89	96	104	112	120	128	136		
	22	65	73	80	87	95	102	110	118	126	135	143		
	20	71	78	96	93	101	109	117	125	133	141	150		
	18	77	84	92	99	107	115	123	131	139	148	158		
	15	86	93	101	109	117	125	133	141	150	158	167		
	12	95	102	110	118	126	135	143	151	160	169	177		
75	24	53	60	67	74	81	89	96	104	112	120			
	22	59	65	73	80	87	95	102	110	118	126			
	20	64	71	78	86	93	101	109	117	124.7	133			
	18	70	77	84	92	99	107	115	123	131	139			
	15	78	86	93	101	109	117	125	133	141	150			
	12	87	95	102	110	118	126	135	143	151	160			
70	24	47	53	60	67	74	81	89	96	104				
	22	52	59	65	73	80	87	95	102	110				
	20	57	64	71	78	86	93	101	109	117				
	18	63	70	77	84	92	99	107	115	123				
	15	71	78	86	93	101	109	117	125	133				
	12	80	87	95	102	110	118	126	135	143				
65	24	40	47	53	60	67	74	81	89					
	22	45	52	59	65	73	80	87	95					
	20	50	57	64	71	78	86	93	101					
	18	56	63	70	77	84	92	99	107					
	15	64	71	78	86	93	101	109	117					
	12	73	80	87	95	102	110	118	126					
60	24	34	40	47	53	60	67	74						
	22	39	45	52	59	65	73	80						
	20	44	50	57	64	71	78	86						
	18	49	56	63	70	77	84	92						
	15	57	64	71	78	86	93	101						
	12	74	81	89	96	104	112	120						
55	24	28	34	40	47	53	60							
	22	33	39	45	52	59	65							
	20	38	44	50	57	64	71							
	18	43	49	56	63	70	77							
	15	50	57	64	71	78	86							
	12	59	65	73	80	87	95							
50	24	23	28	34	40	47								
	22	27	33	39	45	52								
	20	32	38	44	50	57								
	18	37	43	49	56	63								
	15	44	50	57	64	71								
	12	52	59	65	73	80								
45	24	17	23	28	34									
	22	22	27	33	39									
	20	26	32	38	44									
	18	31	37	43	49									
	15	38	44	50	57									
	12	45	52	59	65									
40	24	12	17	23										
	22	16	22	27										
	20	20	26	32										
	18	25	31	37										
	15	32	38	44										
	12	39	45	52										

$Q = Km*\Delta tn = Km*[(ti+to)/2-tr]n$, W
for Plano 600, Km = 0.7582, n = 1.3043

- **Δt** difference in temperature of the heated area and average water temperature in the radiator (°C)
- **ti** radiator water input temperature (°C)
- **to** radiator water output temperature (°C)
- **tr** temperature of the heated area (°C)

EXAMPLE: for ti = 90 °C / to = 75 °C / tr = 20 °C
is read from the heat effect table 167 W/col. P 600

Plano 700/80

For the Plano 700 radiator the saying goes “less is more”, because this radiator exhibits all its beauty through its particular size. The elegance of the Plano is fully exhibited in this high-style radiator. The connection interval is 700 mm, with a height of 776 mm and a depth of 80 mm. It can be joined to and combined with the Plano 700+, where the connection can be either from the floor or wall, and on the left or right side of the radiator. Furthermore, it can also be set up with the Plano DV 500 in any position in the radiator section.

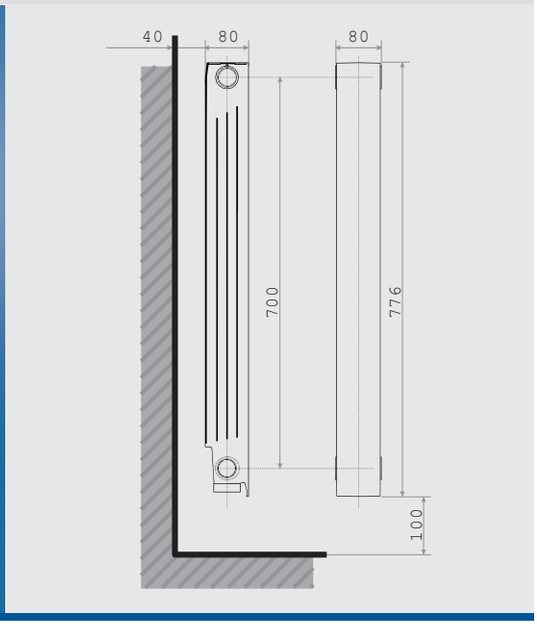

PLANO 700/80

NUM. OF COLUMNS	LENGTH, mm	WATER CONTENT, l	SECTION WEIGHT, kg	HEATING EFFECTS W, AT ΔT °C		
				60	50	30
1	80	0.43	1.79	188	147	75
2	160	0.86	3.66	376	294	150
3	240	1.29	5.49	564	441	225
4	320	1.72	7.32	752	588	300
5	400	2.15	9.15	940	735	375
6	480	2.58	10.98	1128	882	450
7	560	3.01	12.81	1316	1029	525
8	640	3.44	14.64	1504	1176	600
9	720	3.87	16.47	1692	1323	675
10	800	4.30	18.30	1880	1470	750
11	880	4.73	20.13	2068	1617	825
12	960	5.16	21.96	2256	1764	900
13	1,040	5.59	23.79	2444	1911	975
14	1,120	6.02	25.62	2632	2058	1050
15	1,200	6.45	27.45	2820	2205	1125
16	1,280	6.88	29.28	3008	2352	1200
17	1,360	7.31	31.11	3196	2499	1275
18	1,440	7.74	32.94	3384	2646	1350
19	1,520	8.17	34.77	3572	2793	1425
20	1,600	8.60	36.60	3760	2940	1500

TEHNICAL CHARACTERISTICS

COLUMN HEIGHT	COUPLING SIZE	COLUMN WIDTH	MOUNTING DEPTH	COLUMN WEIGHT	WATER CONT. IN COLUMN	HEATING EFFECT
mm	mm	mm	mm	kg	l	m²/col
776	700	80	80	1.75	0.43	0.59

HEATING EFFECT

90 / 70 / 20 °C	75 / 65 / 20 °C	55 / 45 / 20 °C	HEATING EFFECT EXPONENT
Δt 60	Δt 50	Δt 30	—
W / col	W / col	W / col	n
188	147	75	1.3332

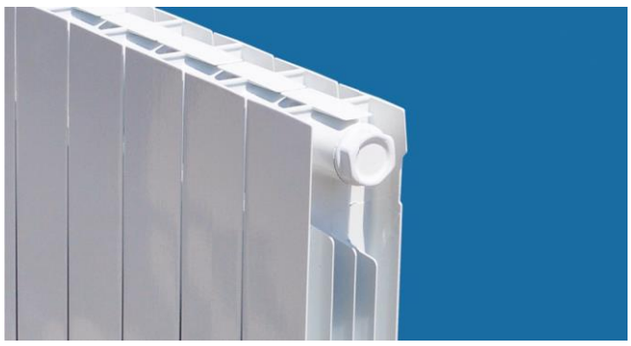

TABLE OF CALCULATIONS FOR HEAT EFFECT FROM RADIATORS AT VARIOUS TEMPERATURES FOR WATER AND HEATED AREAS, W

PLANO 700 (at Δt-t50, Qn=86 W/Čl. according to HRN EN 442-1,2,3)

ti (°C)	tr	to - radiator water output temperature, (°C) and the heat effect in W												
		25	30	35	40	45	50	55	60	65	70	75	80	85
90	24	86	95	104	113	122	132	141	151	161	171	181	192	202
	22	93	102	111	120	130	139	149	159	169	179	190	200	211
	20	100	109	119	128	137	147	157	167	177	187.7	198	209	220
	18	108	117	126	136	145	155	165	175	186	196	207	217	228
	15	119	128	137	147	157	167	177	188	198	209	220	231	242
	12	130	139	149	159	169	179	190	200	211	222	233	244	255
85	24	78	86	95	104	113	122	132	141	151	161	171	181	
	22	85	93	102	111	120	130	139	149	159	169	179	190	
	20	92	100	1109	119	128	137	147	157	167	177	188	198	
	18	99	108	117	126	136	145	155	165	175	186	196	207	
	15	109	119	128	137	147	157	167	177	188	198	209	220	
	12	1200	130	139	149	159	169	179	190	200	211	222	233	
80	24	70	78	86	95	104	113	122	132	141	151	161		
	22	76	85	93	102	111	120	130	139	149	159	169		
	20	83	92	100	109	119	128	137	147	157	167	177		
	18	90	99	108	117	126	136	145	155	165	175	186		
	15	100	109	119	128	137	147	157	167	177	188	198		
	12	111	120	130	139	149	159	169	179	190	200	211		
75	24	62	70	78	86	95	104	113	122	132	141			
	22	68	76	85	93	102	111	120	130	139	149			
	20	75	83	92	100	109	119	128	137	147.2	157			
	18	81	90	99	108	117	126	136	145	155	165			
	15	92	100	109	119	128	137	147	157	167	177			
	12	102	111	120	130	139	149	159	169	179	190			
70	24	54	62	70	78	86	95	104	113	122				
	22	60	68	76	85	93	102	111	120	130				
	20	66	75	83	92	100	109	119	128	137				
	18	73	81	90	99	108	117	126	136	145				
	15	83	92	100	109	119	128	137	147	157				
	12	93	102	11	120	130	139	149	159	169				
65	24	46	54	62	70	78	86	95	104					
	22	52	60	68	76	85	93	102	111					
	20	58	66	75	83	92	100	109	119					
	18	65	73	81	90	99	108	117	126					
	15	75	83	92	100	109	119	128	137					
	12	85	93	102	111	120	130	139	149					
60	24	39	46	54	62	70	78	86						
	22	45	52	60	68	76	85	93						
	20	51	58	66	75	83	92	100						
	18	57	65	73	81	90	99	108						
	15	66	75	83	92	100	109	119						
	12	86	95	104	113	122	132	141						
55	24	32	39	46	54	62	70							
	22	38	45	52	60	68	76							
	20	43	51	58	66	74.5	83							
	18	49	57	65	73	81	90							
	15	58	66	75	83	92	100							
	12	68	76	85	93	102	111							
50	24	26	32	39	46	54								
	22	31	38	45	52	60								
	20	36	43	51	58	66								
	18	42	59	57	65	73								
	15	51	58	66	75	83								
	12	60	68	76	85	93								
45	24	20	26	32	39									
	22	24	31	38	45									
	20	30	36	43	51									
	18	35	42	49	57									
	15	43	51	58	66									
	12	52	60	68	76									
40	24	14	20	26										
	22	18	24	31										
	20	23	30	36										
	18	28	35	42										
	15	36	43	51										
	12	45	52	60										

$$Q = Km*\Delta tn = Km*[(ti+to)/2-tr]n, W$$

for Plano 700, Km = 0.7996, n = 1.3213

- **Δt** difference in temperature of the heated area and average water temperature in the radiator (°C)
- **ti** radiator water input temperature (°C)
- **to** radiator water output temperature (°C)
- **tr** temperature of the heated area (°C)

EXAMPLE: for ti = 90 °C / to = 75 °C / tr = 20 °C is read from the heat effect table 198 W/col.P 700

Ekonomik 285

Small but powerful, the Ekonomik 285 was once often installed in hospital and hotel hallways and in many sales areas. Today, on account of its quality and market demands, it is still manufactured. Connecting the columns is carried out using 5/4 inch couplers and 5/4 inch seals. The interval between the couplers is 200 mm, with a total height of 285 mm and a depth of 160 mm.

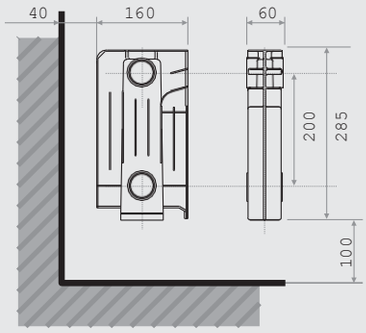

EKONOMIK 285

NUM. OF COLUMNS	LENGTH, mm	WATER CONTENT, l	SECTION WEIGHT, kg	HEATING EFFECTS W, AT ΔT °C		
				60	50	30
1	60	0.48	1.13	88	69	35
2	120	0.96	2.56	176	138	70
3	180	1.44	3.84	264	207	105
4	240	1.92	5.12	352	276	140
5	300	2.40	6.40	440	345	175
6	360	2.88	7.68	528	414	210
7	420	3.36	8.96	616	483	245
8	480	3.84	10.24	704	552	280
9	540	4.32	11.52	792	621	315
10	600	4.80	12.80	880	690	350
11	660	5.28	14.08	968	759	385
12	720	5.76	15.36	1056	828	420
13	780	6.24	16.64	1144	897	455
14	840	6.72	17.92	1232	966	490
15	900	7.20	19.20	1320	1035	525
16	960	7.68	20.48	1408	1104	560
17	1,020	8.16	21.76	1496	1173	595
18	1,080	8.64	23.04	1584	1242	630
19	1,140	9.12	24.32	1672	1311	665
20	1,200	9.60	25.60	1760	1380	700

TEHNICAL CHARACTERISTICS

COLUMN HEIGHT	COUPLING SIZE	COLUMN WIDTH	MOUNTING DEPTH	COLUMN WEIGHT	WATER CONT. IN COLUMN	HEATING EFFECT
mm	mm	mm	mm	kg	l	m²/col
285	200	60	160	1.13	0.48	0.25

HEATING EFFECT

90 / 70 / 20 °C	75 / 65 / 20 °C	55 / 45 / 20 °C	HEATING EFFECT EXPONENT
Δt 60	Δt 50	Δt 30	—
W / col	W / col	W / col	n
88	69	35	1.36

TABLE OF CALCULATIONS FOR HEAT EFFECT FROM RADIATORS AT VARIOUS TEMPERATURES FOR WATER AND HEATED AREAS, W

EKONOMIK 285 (at Δt-50, Qn=84 W/col. according to HRN EN 442-2)

ti (°C)	tr	to - radiator water output temperature, (°C) and the heat effect in W												
		25	30	35	40	45	50	55	60	65	70	75	80	85
90	24	40	44	48	53	57	62	66	71	76	81	85	90	96
	22	43	48	52	56	61	65	70	75	80	84	89	95	100
	20	47	51	55	60	64	69	74	79	84	88	93	99	104
	18	50	55	59	64	68	73	78	83	87	92	98	103	108
	15	55	60	64	69	74	79	84	88	93	99	104	109	114
	12	61	65	70	75	80	84	89	95	100	105	110	115	121
85	24	36	40	44	48	53	57	62	66	71	76	81	85	
	22	39	43	48	52	56	61	65	70	75	80	84	89	
	20	43	47	51	55	60	64	69	74	79	84	88	93	
	18	46	50	55	59	64	68	73	78	83	87	92	98	
	15	51	55	60	64	69	74	79	84	88	93	99	104	
	12	56	61	65	70	75	80	84	89	95	100	105	110	
80	24	32	36	40	44	48	53	57	62	66	71	76		
	22	35	39	43	48	52	56	61	65	70	75	80		
	20	39	43	47	51	55	60	64	69	74	79	84		
	18	42	46	50	55	59	64	68	73	78	83	87		
	15	47	51	55	60	64	69	74	79	84	88	93		
	12	52	56	61	65	70	75	80	84	89	95	100		
75	24	28	32	36	40	44	48	53	57	62	66			
	22	31	46	51	56	62	67	72	78	83	89			
	20	35	39	43	47	51	55	60	64	69	74			
	18	38	42	46	50	55	59	64	68	73	78			
	15	43	47	51	55	60	64	69	74	79	84			
	12	48	52	56	61	65	70	75	80	84	89			
70	24	25	28	32	36	40	44	48	53	57				
	22	28	31	35	39	43	48	52	56	61				
	20	31	35	39	43	47	51	55	60	64				
	18	34	38	42	46	50	55	59	64	68				
	15	39	43	47	51	55	60	64	69	74				
	12	43	48	52	56	61	65	70	75	80				
65	24	21	25	28	32	36	40	44	48					
	22	24	28	31	35	39	43	48	52					
	20	27	31	35	39	43	47	51	55					
	18	30	34	38	42	46	50	55	59					
	15	35	39	43	47	51	55	60	64					
	12	39	43	48	52	56	61	65	70					
60	24	18	21	25	28	32	36	40						
	22	21	24	28	31	35	39	43						
	20	23	27	31	35	39	43	47						
	18	26	30	34	38	42	46	50						
	15	31	35	39	43	47	51	55						
	12	40	44	48	53	57	62	66						
55	24	15	18	21	25	28	32							
	22	17	21	24	28	31	35							
	20	20	23	27	31	35	39							
	18	23	26	30	34	38	42							
	15	27	31	35	39	43	47							
	12	31	46	51	56	62	67							
50	24	12	15	18	21	25								
	22	14	17	21	24	28								
	20	17	20	23	27	31								
	18	19	23	26	30	34								
	15	23	27	31	35	39								
	12	28	31	35	39	43								
45	24	9	12	15	18									
	22	11	14	17	21									
	20	14	17	20	23									
	18	16	19	23	26									
	15	20	23	27	31									
	12	24	28	31	35									
40	24	6	9	12										
	22	8	11	14										
	20	11	14	17										
	18	13	16	19										
	15	17	20	23										
	12	21	24	28										

$$Q = Km*\Delta tn = Km*[(ti+to)/2-tr]n,\ W$$

for Ekonomik 285, Km = 0.3445, n = 1.3551

- **Δt** difference in temperature of the heated area and average water temperature in the radiator (°C)
- **ti** radiator water input temperature (°C)
- **to** radiator water output temperature (°C)
- **tr** temperature of the heated area (°C)

EXAMPLE: for ti = 90 °C / to = 75 °C / tr = 20 °C is read from the heat effect table 93 W/col. E 285

Orion dv, Solar dv i Plano dv

THE NEW LIPOVICA DV RADIATORS ENABLE RADIATORSTO BE CONNECTED TO A CENTRAL HEATING SYSTEM FROM ABOVE. THE DV RADIATOR IS CONNECTED TO A SECTION JUST AS ANY OTHER COLUMN. IT CAN BE POSITIONED ANYWHERE IN THE SECTION, DEPENDING ON THE REQUIREMENTS AND DIMENSIONS OF THE AREA.

- Economical solution
- Simple connection
- Ability to connect in sections
- The solution for single-pipe and double-pipe systems
- Ability to choose a corner or straight valve

DV radiators = Lipovica radiators equipped with a bottom valve connection

The DV radiator comprises any type of column: Orion, Solar, Plano and the 4-way valve with a lance pipe type VUA 50.

You can also choose valves for double-pipe or single-pipe heating, including a corner or flat valve.

Also available are:
- DV radiator, corner, for double-pipe system
- DV radiator, straight, for double-pipe system
- DV radiator, corner, for single-pipe system
- DV radiator, straight, for single-pipe system

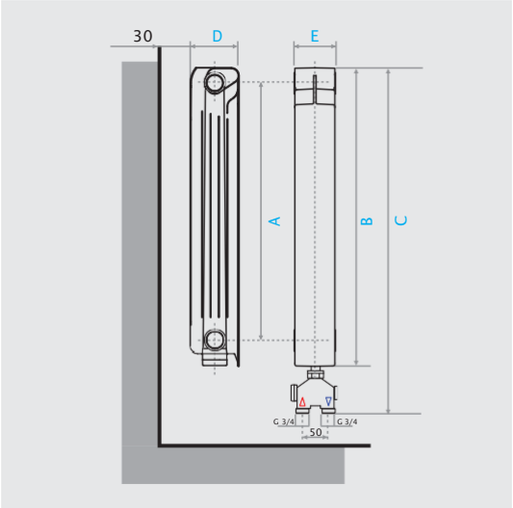

DV column – straight valve

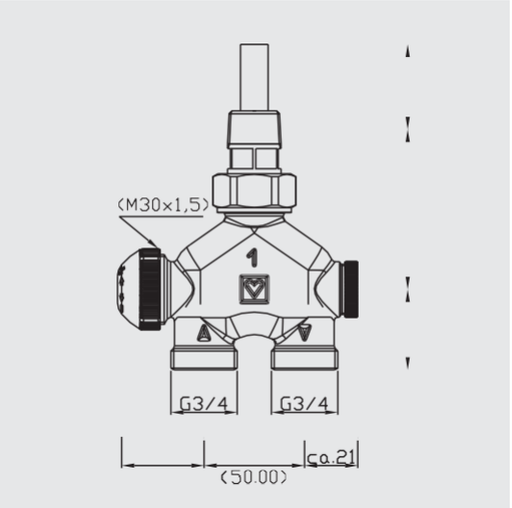

Dimensions of straight valve

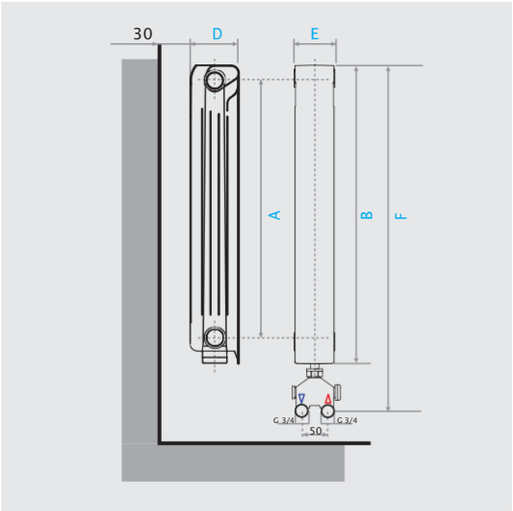

DV column – corner valve

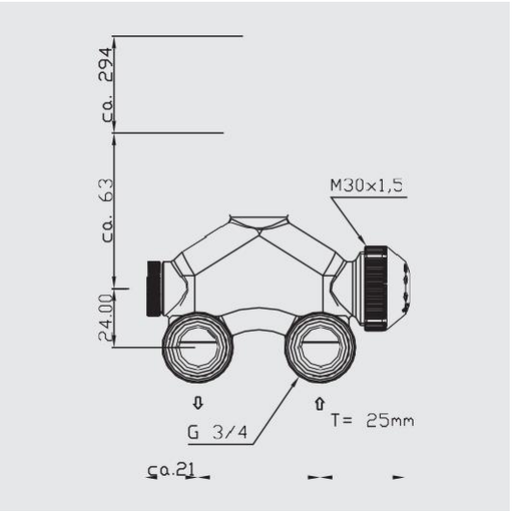

Dimensions of corner valve

TYPE OF RADIATOR		SOLAR dv				ORION dv			PLANO dv			
RADIATOR MODEL		350/80	500/80	600/80	700/80	350/95	500/95	600/95	350/80	500/80	600/80	700/80
Height of connector under A	mm	350	500	600	700	350	500	600	350	500	600	700
Height of column B	mm	426	576	676	776	430	580	680	426	576	676	776
Height of column with straight valve C	mm	511	661	761	861	515	665	765	511	661	761	861
Depth of column D	mm	80	80	80	80	95	95	95	80	80	80	80
Width of column E	mm	80	80	80	80	80	80	80	80	80	80	80
Length from top of column to the centre of the corner valve connection F	mm	503	653	753	853	507	657	757	503	653	753	853
Distance between valve connections	mm	50	50	50	50	50	50	50	50	50	50	50
Valve width	mm	110	110	110	110	110	110	110	110	110	110	110
Weight of column and valve	kg	1,55	1,78	1,98	2,29	1,86	1,96	2,15	1,55	1,83	2,11	2,29
Water content	l	0,30	0,34	0,38	0,43	0,30	0,34	0,38	0,30	0,34	0,38	0,43
Heating surface	m²/col	0,29	0,41	0,49	0,58	0,36	0,51	0,61	0,30	0,42	0,50	0,59

Orion+, Solar+ i Plano+

ORION+, SOLAR+ AND PLANO+ PRESENT A SOLUTION FOR ALL OF THOSE WHO WANT TO REDUCE VISIBLE PIPING IN THEIR FLAT OR HOUSE TO A MINIMUM. THE INSTALLATION CONNECTION CAN BE CARRIED OUT IN THE FLOOR OR WALL , WITH THE REGULATION VALVE MOUNTED ON THE LEFT OR RIGHT-HAND SIDE. THE PLUS RADIATORS HAVE BEEN DEVELOPED IN FOUR TYPES:

- DP - mountable valve on the right-hand side; connections for floor installations
- DZ - mountable valve on the right-hand side; connections for wall installations
- LP - mountable valve on the left-hand side; connections for floor installations
- LZ - mountable valve on the left-hand side; connections for wall installations

Each Orion+, Solar+ or Plano+ radiator comprises two appropriate radiator columns which have stop valves. The stop valves allow the radiators to be connected to or disconnected from the heating installation, and with the aid of the respective transitional piece, i.e. fitting, they can be connected to all types of "two-piping" installations.

The interval between the outlet and inlet is 80 mm.
The outlet is the external column, the inlet is the internal column.

The construction itself allows optimal distancing of the radiator from the wall or floor. Located in the upper radiator hub is a mountable valve which due to its construction provides balancing of the system and very precise manual or automatic regulation of water flow through the radiator.

Automatic regulation is achieved by an installed thermostat head on the mountable valve. Solar+, Orion+ and Plano+ radiators feature simple mounting and dismounting onto the respective type of radiator. This requires two ordinary radiator connectors equipped with seals allowing the Solar+, Orion+ and Plano+ radiators to be connected to standard Solar, Orion and Plano radiators.

The standard section is always added to the mounted valve. For the optimal use of the Solar+, Orion+ and Plano+radiators, it is recommended that the thermostat head be installed on the mountable valve. Note that only the Danfos thermostat head can be installed on the mountable valve.

For the + type radiators as with the other radiators from the Lipovica assortment, a 10-year guarantee is given for radiators provided that the installation is carried out by a professional and that the heating system is used in the proper manner. The installed valve assembly has an 18-month guarantee. It is recommended that both sectional stop valves not be closed for longer periods of time due to a possible increase in pressure in the sections caused by thermal dilatations which may lead to undesirable effects (cracks in the sectional columns).

LEGEND:

1. stop valve
2. 1" plug
3. flow director,
   control valve and cap
4. 1" couplers with seals

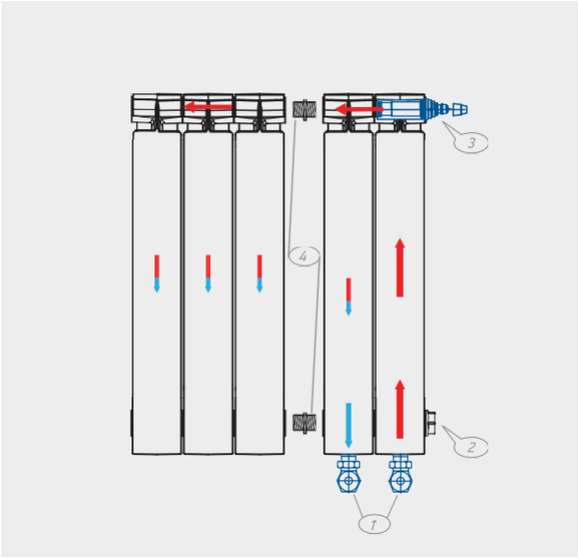

Illustration of water flow through the Plus radiator

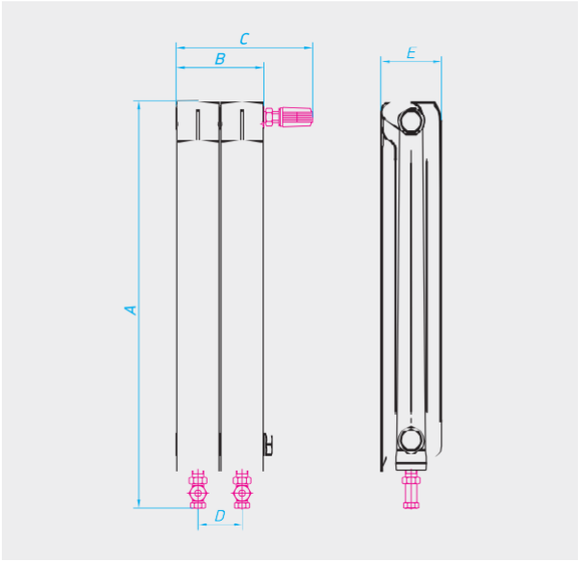

Set Orion +

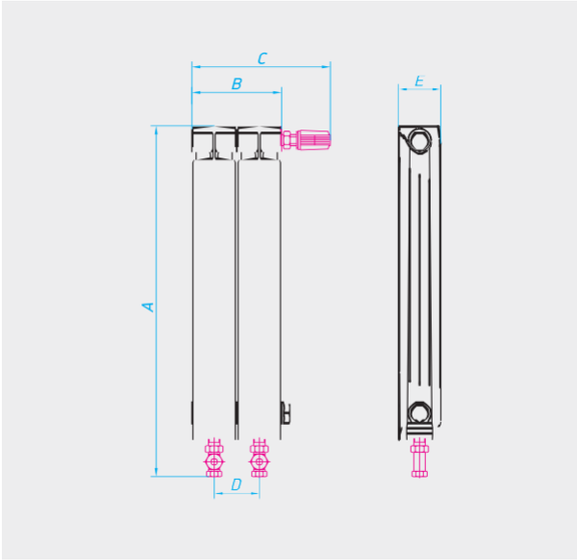

Set Solar +

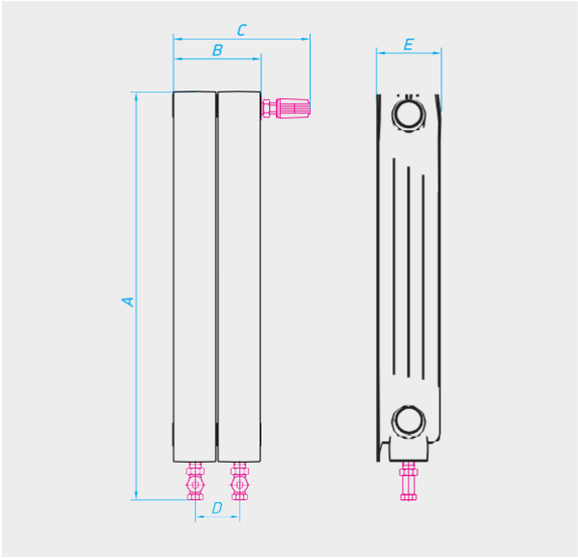

Set Plano +

LZ or LP

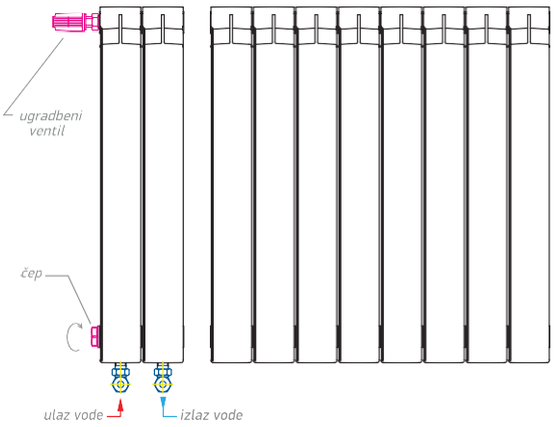

Installation of Plus radiator into floor or wall - left

DZ or DP

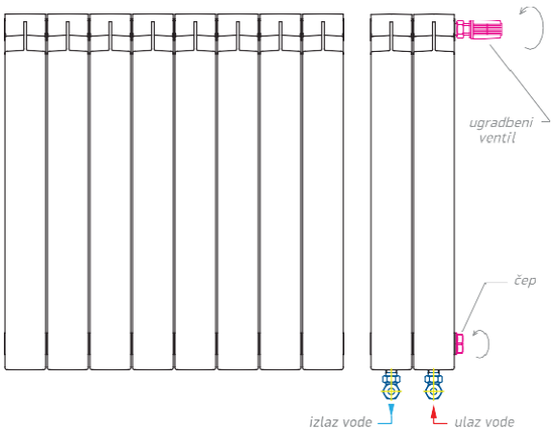

Installation of Plus radiator into floor or wall - right

TYPE OF RADIATOR		SOLAR +				ORION +			PLANO +		
RADIATOR MODEL		350/80	500/80	600/80	700/80	350/98	500/95	600/95	350/80	600/80	700/80
Total height of connection floor	mm	503	653	753	853	504	654	754	503	753	853
Total height of connection wall	mm	488	638	738	838	489	639	739	488	738	838
Set width B	mm	165	165	165	165	163	163	163	165	165	165
Set width with valve C	mm	265	265	265	265	263	263	263	265	265	265
Connector distance D	mm	80	80	80	80	80	80	80	80	80	80
Depth E	mm	80	80	80	80	95	95	95	80	80	80
Set weight	kg	2,86	3,41	3,85	4,25	3,73	4,11	4,36	2,84	3,94	4,3
Connection		VN ¾"	VN ¾"	VN ¾"	VN ¾"	VN ¾"	VN ¾"	VN ¾"	VN ¾"	VN ¾"	VN ¾"
Water content	l	0,60	0,68	0,76	0,86	0,60	0,68	0,76	0,30	0,38	0,43
Heating area	m^2/set	0,58	0,82	0,98	1,16	0,72	1,02	1,22	0,60	1,0	1,18

Assembly accessories

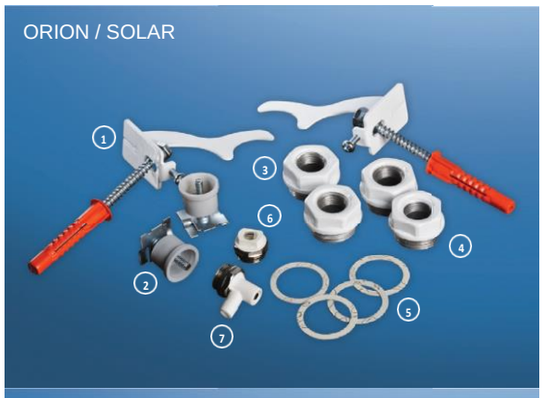

Assembly accessories	
ORION / SOLAR	
1	Console (SOLAR, ORION)
2	Spacer
3	Left 1" / ½" reduction coupler
4	Right 1" / ½" reduction coupler
5	1" seal
6	Vent ½"
7	Outlet ½"

Assembly accessories	
EKONOMIK	
1	Reduction coupler 5/4" / ½"
2	Plug 5/4"
3	Console RKP
4	Fixture NLR
5	Spacer
6	Fixture KLP
7	Console PLP
8	Seal 5/4"
9	Legs LP
10	Coupler 5/4"
11	Outlet ½"
12	Vent ½"

- Console – allows simple mounting of the radiator at the stipulated distance from the wall. The ability to move the sections in horizontal and vertical directions for the purpose of properly mounting the radiator.
- Spacer – regulates the slope of the radiator with respect to the wall surface.
- Vent – when the section is properly mounted, it allows the release of air from the system.
- Outlet – regulates the quantity of medium and pressure in the section.

Installation instructions:

1. When mounting the radiators, use only the Lipovica or equivalent consoles that permit quiet and unhindered operation.
2. The seal used when connecting additional elements to the section (columns, reduction couplers) should be a Lipovica or equivalent product.
3. The reduction couplers and connectors must be Lipovica or an equivalent product. Only such connectors and reduction couplers guarantee simple installation and proper operation. If during installation the connectors and reduction couplers can't be tightened by hand, there is a possibility that the threads aren't clean which should be rectified accordingly. Otherwise, damage to the threads may occur.
4. When connecting the columns, an appropriate torque of at least 30 Nm should be applied.
5. The radiator sections should in no way be placed in direct proximity to substances that may lead to paint damage due to their aggressive chemical action.
6. The existing protective folio and adjacent carton lids should not be removed during installation works in the respective area, since such protection prevent damage to paint and other undesired effects.

SOLAR / ORION legs

The solar / orion legs are used for mounting the stated family of radiators onto glass surfaces where other forms of installation are not possible, and therefore avoids contact and damage to the back area. Due to its simple design and simple installation, they are almost unnoticeable and very practical, ensuring proper stability for the radiator sections.

The legs are made from steel and are adjustable. The consist of two parts:

a) a base that is fixed to the floor with bolts,
b) an adjustable section at the rear section of the radiator section.

LIPOVICA D.O.O.
a company for the production of aluminium radiators,
pressure casts and gravity casts

Lipovečka 24, 44317 DONJA VLAHINIČKA, POPOVAČA
OIB: 62434592704
MB: 1686623

RECEPTION

Tel: +385 (0) 98 3466 83
lipovica@lipovica.hr

SALES
prodaja@lipovica.hr

www.lipovica.hr